Repair Manual

MZ 125 SX/SM

Reproduced for

Riders Club

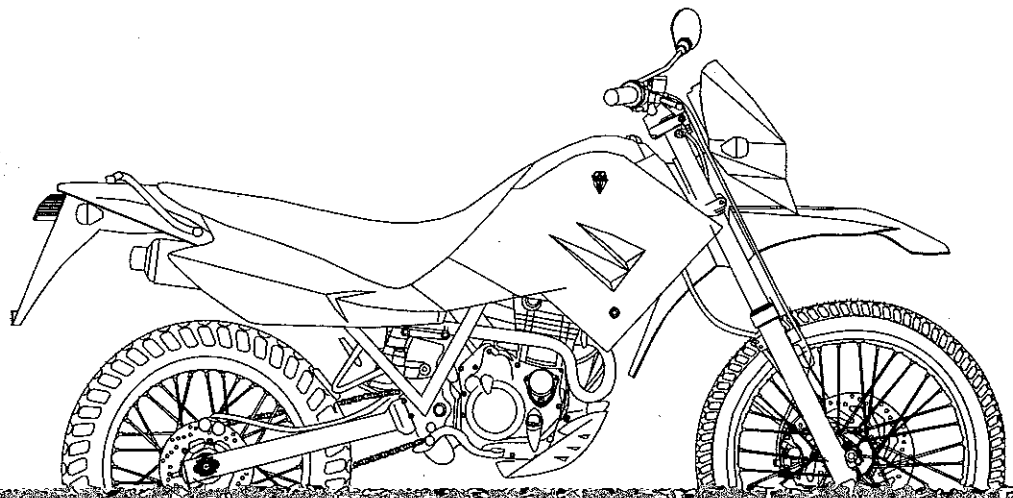

Foreword

This repair manual explains the most important work procedures for the main components of the MZ 125 SX/SM. It is primarily oriented toward MZ service stations with qualified, trained personnel and individuals with a technical understanding of the mechanical concepts and processes. All indications and descriptions refer to a motorcycle as delivered by the factory. Work on accessories and their mounting are not covered here. Repairs and maintenance work should only be performed with sufficient knowledge and experience and not based on this manual alone.

We are not liable for damages due to:

- unauthorized technical modifications
- installation of parts which are not original replacement parts or accessories
- installation of accessories not intended for the specific model
- improper repair work on MZ vehicles!

This repair manual contains various hazard warnings, important information and tips.
Please pay careful attention to this information to eliminate the risk of injury during maintenance and repair work. Incorrect maintenance or repairs can endanger life and health or damage the vehicle. Please also note that the hazard warnings, important information and tips are not exhaustive. It would be impossible to warn against all possible hazards and consequences which could result from failure to follow these instructions.

We are constantly working on the further development of our vehicles. For this reason, we reserve the right to make changes in the interests of technical progress (equipment, shape, technology, etc.).

This repair manual is based on the most recent information available at the time of publishing. Therefore, no claims may be derived from the information, figures and descriptions in this repair manual. The illustrations also do not necessarily perfectly depict the vehicle to be repaired.

This repair manual is protected by copyright. Reprinting, reproduction or translation, even of excerpts, is not permitted without approval by MZ. MZ Motorrad- und Zweiradwerk GmbH expressly retains all rights granted under copyright law.

© 2002 Motorrad- und Zweiradwerk GmbH

PF 1170, Alte Marienberger Straße 30 - 35

D-09401 Zschopau-Hohndorf, Germany

Technical Customer Service

Telephone: +49 37 25 49-0

Fax: +49 37 25 491-18

e-mail: muz@muz.de

Internet: http://www.muz.de

Table of Contents

1 Safety Regulations and Information

1.1 Important Information

Important information in this manual is designated as follows:

DANGER!

Immediate danger!

Failure to heed the warning may result in serious injury or death.

Attention!

Dangerous situation!

Failure to heed the warning may result in injuries or property damage.

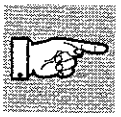

Note:

Useful supplemental information or user tips.

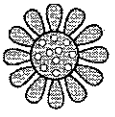

Environment!

Possible dangers for the environment and information on how to prevent them.

Tightening torque:

Special tightening torques to be observed.

Every safety item explains:
- which danger exists,
- what can happen,
- what you can do to prevent injuries.

Warning of hazards when handling batteries

Warning against hazardous voltage

Warnings about the risk of crushing injuries caused by the driving chain

Danger of crushing

Warning against corrosive liquids

Warning about flammable materials and substances

Warning about hot surfaces

Warning about explosive substances

1.2 Safety Regulations

Attention!

Installation errors can endanger the health or even the life of the vehicle operator and other persons in traffic.
For this reason, please observe all safety regulations and information when performing work.

- Work safely and with your full attention! Follow the procedures described in the manual!
- Only operate engines in a well ventilated work area and for no longer than necessary (health and environment!
- Use only original replacement parts and accessories from MZ Motorrad- und Zweiradwerk GmbH!
- Dispose of brake fluid, fuel remains and oily rags according to the regulations!
- Install the parts using the specified tightening torques!
- When working on the vehicle, secure it against tipping or rolling away!
- Observe the BGR 157 safety rules of the Professional Association of Vehicle Maintenance, Workshop Ordinance ZH1/525 and the general regulations as per BGV A1.

1.3 Important Work Information

- Always de-energize the electrical installation (disconnect the batteries and/or remove the fuses) before starting any repair on this installation.
- Label all removed parts as necessary in the order in which they were moved. This helps ensure that the parts are returned to their original locations.
- When working on the vehicle, protect painted surfaces and seats with a clean cloth or other suitable cover.
- Carefully inspect all parts before removal to determine the purpose of the repair.
- Use special tools when specified.
- When removing multiple screws or nuts, start with the middle or largest screw.
  Tighten the screws in crosswise alternation in two or more steps.

1.4 Important Maintenance Instructions

The dealer is responsible for performing the following work in coordination with the vehicle owner to guarantee the vehicle's operating safety and roadworthiness whenever inspections are made and/or during any unscheduled visit to a workshop.

- Replace the brake fluid and the gaskets of the brake cylinders and the brake calipers every 2 years and after every repair performed on the brake systems.
- Replace the coolant every two years.
- Replace the engine oil at the mandatory inspections or at least once per year.
- Replace the brake hoses in case of damage or cracking or every 4 years.
- Replace rubber components, fuel and vent hoses in case of damage or cracking or every 4 years.
  Replace cooling system hoses in case of damage or cracking.

1.5 Identification

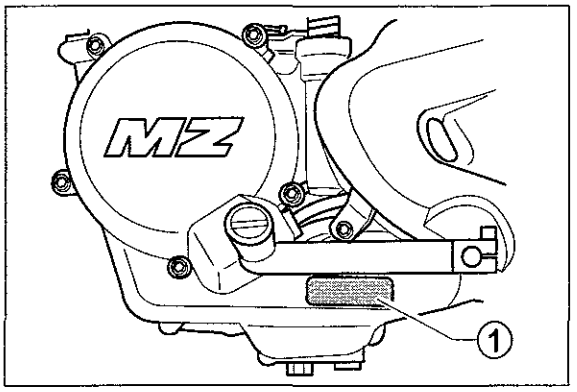

Fig.1: Location of the engine number (1)

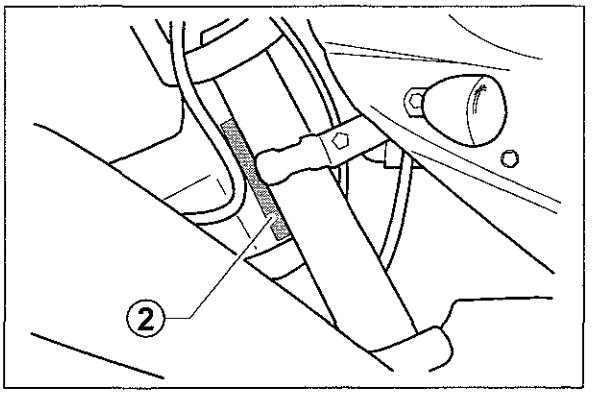

Fig.2: Location of the vehicle identification number (2)

2 Data Sheets

2.1 Technical Data

Dimensions	Variant MZ 125 SX	Variant MZ 125 SM
Overall length	2185 mm	2010 mm
Overall width with/without mirror/ with hand protection	960/770 mm 860 mm	960/770 mm 860 mm
Width of handlebars	770 mm	770 mm
Height with/without mirror	1340/1220 mm	1280/1160 mm
Seat height	860 mm	830 mm
Wheel base	1440 ± 15 mm	1440 ± 15 mm
Caster	107 mm	73 mm
Steering angle	63.5°	64.5°
Steering angle left/right	40° each	40° each
Turning circle	3.5 m	3.5 m
Ground clearance with max. permissible load with/without base protection	200/250 mm	170/220 mm
Unladen weight (ready to ride)	127.5 kg	129.5 kg
Unladen front axle load	58.5 kg	60 kg
Unladen rear axle load	69 kg	69.5
Total weight permitted	320 kg	320 kg

Engine	
Engine type	MZ 125
Method of operation / control	4-stroke ignition engine, DOHC, 4 valves operated with bucket tappets
Number of cylinders	1, vertical, inclined 10° forward
Cylinder capacity	124 cm^3
Piston stroke	44.0 mm
Hole	60.0 mm
Output at rpm	11 kW/9000 rpm
Cooling method/operating pressure	Liquid cooling, 1.4 bar
Nominal set value of the engine temperature regulator	Thermostat opening beginning 80 ° ~ 84 °C
Maximum torque at rpm	11.7 Nm / 8500 rpm
Compression ratio	$11.2^{\pm 1}$:1
Camshafts • Drive • External diameter of the camshaft at the bearing	 control chain 92 RH 2010 / 122 chain links 19.967 - 19.980 mm

Engine	
Bucket tappet	
• Bucket tappet outside diameter	24.967 - 24.980 mm
• Bucket diameter in cylinder head	25.000 - 25.021 mm
• Clearance	0,020 - 0.040 mm
Lubrication	wet sump lubrication
Clutch	wet multi-plate clutch
Air Filter Manufacturer	D 900 dry paper filter FILTRAK

Carburettor	
Manufacturer, identification, type	MIKUNI VM 24
Main jet	100
Needle jet	O - 0
Idling jet	15
Needle adjustment	5L10/4 th notch from top
Idle air adjusting screw	1 - 2.5 turn out
Idling speed	1800^{+100} rpm
Fuel level	32 mm beyond the carburetor centre
Float height	20^{+1} mm from sealing surface of the carburetor casing
Exhaust gas setting	max. 4.5Vol% CO

Transmission			
Number of gears		6	
Idling speed indicator		pilot lamp "N"	
Lubrication		wet sump drip lubrication	
Type of transmission		spur pinion-change (wheel) gear with dog-type lock shift	
Operating system		left foot controls	
Primary step-down gear system		spur gears	
Secondary step-down gear system		Chain 1/2" x 5/16", 134 links	Chain 1/2" x 5/16", 132 links
Ratios		**Variant MZ 125 SX**	**Variant MZ 125 SM**
Primary ratio		24/91 (1:3,792)	
Secondary ratio		16/52 (1:3,25)	16/49 (1:3,063)
1st gear	12/35	1:35,942	1:33,868
2nd gear	16/30	1:23,105	1:21,772
3rd gear	17/24	1:17,397	1:16,393
4th gear	21/24	1:14,083	1:13,271
5th gear	23/22	1:11,787	1:11,107
6th gear	22/18	1:10,082	1:9,501

Chassis		
Type of frame	tubular frame	
Front suspension		
• Design	Telescopic fork	
• Spring travel	220 mm	
Rear suspension		
• Design	long swinging fork	
• Spring travel/adjustment	220 mm/adjustable spring base	
Steering bearing	Deep groove ball bearing	
Clutch lever and throttle twist grip		
• Play in the clutch lever	3 - 5 mm at the end of the clutch	
• Play in throttle Bowden cable	2 - 3 mm at the twist grip flange	
Wheels - spoked wheels	**Variant MZ 125 SX**	**Variant MZ 125 SM**
Front tire	90/90 - 21	110/70-17
Tire pressure	190 kPa/1,9 bar/28 psi	180 kPa/1,8 bar/26 psi
Rim size	1.85 x 21	3.00 x 17
Rim wobble limit vertical	0,5 mm	0,5 mm
side	0,5 mm	0,5 mm
Rear tire	120/80 - 18	130/70-17
Tire pressure (value at perm. axle load)	200 (250) kPa/2 (2,5) bar/29 (36) psi	230 (260) kPa/2,3 (2,6) bar/33 (66) psi
Rim size	2.50 x 18	3.50 x 17
Rim wobble limit vertical	0,5 mm	0,5 mm
side	0,5 mm	0,5 mm
Front wheel brake		
• Design	hydraulic single-disc brake with a two-piston floating caliper and manually operated cylinder	
• Outside diameter x plate thickness	280 x 4 mm	
• Thickness of the brake pad	5,0 mm	
• Wear limit	< 2,0 mm	
• Main brake cylinder inside diameter	11 mm	
• Brake caliper cylinder inside diameter	2 x 25,4 mm	
• Brake fluid	DOT 4	
Rear wheel brake		
• Design	hydraulic single-disc brake with a two-piston floating caliper and manually operated cylinder	
• Outside diameter x plate thickness	220 x 4 mm	
• Thickness of the brake pad (wear limit)	5,0 mm	
• Wear limit	< 2,0 mm	
• Main brake cylinder inside diameter	13 mm	
• Brake caliper cylinder inside diameter	2 x 25,4 mm	
• Brake fluid	DOT 4	
Brake level and brake pedal		
• Play in brake lever	2 - 5 mm at the end of the brake lever	
• Position of brake pedal	25 mm under the footrest rubber surface	

Electrical Installation	
Nominal voltage	12V
Ignition	contract-free capacitor ignition (CDI)
Ignition unit	rpm limitation above 10,500 rpm
• Resistance of the ignition coil	324 ± 32 Ohm at 23°C
• Ignition unit / manufacturer	16.754.126/Iskra, AET MZ 125 SX: 16.754.134/Iskra, AET (80 km/h variant) MZ 125 SM: 16.754.127/Iskra, AET (80 km/h variant)
Ignition coil:	
• Model/manufacturer	16.725.102/Iskra, AET
• Minimum sparking distance	6 mm
• Resistance of the primary coil	0,79 Ω ± 15% at 20°C
• Resistance of the secondary coil	7,6 kΩ ± 20% at 20°C
Ignition time point	depends on rpm, stationary 6°, dynamically up to 34 ± 2° before the top dead centre (TDC)
80 km/h variant:	
• Riding speed less than 2 km/h	ignition event at 6,700 rpm
• Riding speed more than 2 km/h and less than 80 km/h	rpm limitation above 10,500 rpm
• Riding speed more than 80 km/h	ignition events to reduce performance
Spark plug, air gap	NGK CR8E, 0,7 mm
Alternator	alternating current generator 180 W at 5000 rpm
Battery	12V/9 Ah
High and low beam bulb	H4 12V-60/55W
Parking light	12V-5W
Direction indicators	12V-10W
Tail light	12V-21/5W
Speedometer illumination	12V-2W
Indication lights	12V-1,2W
Main fuse (light blue)	15A
Indicator fuse (violet)	3,0A
Fan fuse (brown)	7,5A

Filling Amounts	
Fuel type	Super unleaded, min. ROZ 95
Fuel volume	12,5 l
Fuel reserve	3,6 l
Engine oil	1.2 l SAE 15W-50 API SG/SH 1.2 l SAE 15W-40 API SG/SH
Total coolant volume	900^{-50} cm^3
Telescopic fork volume per spar Oil type	445 cm^3 Fork oil SAE 7,5 - 10W
Shock absorber	Hydro-pneumatic (no maintenance can be performed by a contract workshop)

Driving Performance	
Maximum speed	110 km/h or 80 km/h (reduced performance version)
Fuel consumption Method of determination	3.2 l/100km Point-to-point fuel consumption

2.2 Inspection

Engine and gearbox	see page	after 1.000 km	every 6,000 km or 1x year	every 12.000 km	every 2 years
Check/adjust clutch clearance	144	•	•	•	
Check/adjust valve clearance	169	•	•	•	
Coolant level/density/anti-freeze compound		•	•	•	Replacing
Check oil level/add oil	138	after every 1,000 km			
Oil change, clean the coarse filter		•	•	•	
Tighten the exhaust pipe attachment to the cylinder		•	•	•	
Check the engine mountings		•	•	•	
Clean the carburettor	192	•	•	•	
Check the carburettor settings		•	•	•	
Measure the exhaust fume values		annually			

Chassis	see page	after 1.000 km	every 6,000 km or 1x year	every 12.000 km	every 2 years
Check the braking efficiency			•	•	
Check the brake fluid level	73, 89	before every ride			
Change the brake fluid					•
Check the thickness of the brake linings		every 2,000 km			
Grease the ball joint between the shock absorber and the swingarm			•	•	
Check and service the telescopic fork			•	•	
Change the fork oil					•
Check the air pressure and condition of the tires		before every ride			
Check the wheel rim eccentricity			•	•	
Check the clearance on the wheel bearings			•	•	
Check the damping of the rear wheel drive			•	•	
Clean the fuel filter in the fuel cock		•	•	•	
Clean the air filter	45	every 6,000 km (or more often, depending on riding conditions)			

Chassis	see page	after 1.000 km	every 6,000 km or 1x year	every 12.000 km	every 2 years
Replace the air filter		every 12,000 km (or more often, depending on riding conditions)			
Empty the condensate collector under the intake			•	•	
Check that all bolts, screws and hose clips are tight		•	•	•	
Check the chain slack and wheel tracking	107	every 500 km (or more often, depending on riding conditions)			
Clean and lubricate the chain		every 500 km (or more often, depending on riding conditions)			
Lubricate the hand lever and throttle twist grip		1 x year (or more often, depending on riding conditions)			
Check and lubricate the bowden cables	39	1 x year (or more often, depending on riding conditions)			
Lubricate speedometer shaft		1 x year (or more often, depending on riding conditions)			
Clean and lubricate all sliding surfaces and bearings			•	•	
Check the side stand switch		•	•	•	

Electrical Installation	see page	after 1.000 km	every 6,000 km or 1x year	every 12.000 km	every 2 years
Check the lighting and signaling systems		before every ride			
Check the headlight adjustment (also after every adjustment of the spring preload of the shock absorber)	32	•	•	•	
Check all accessible contacts, treat with contact spray			•	•	
Spark plugs: check, clean/replace	118	•	•	•	
Check the air gap of the pick-up sensor	129			•	
Check the electrolyte level in the battery and the cable terminals	114	every 6 weeks			

2.3 Lubrication Points

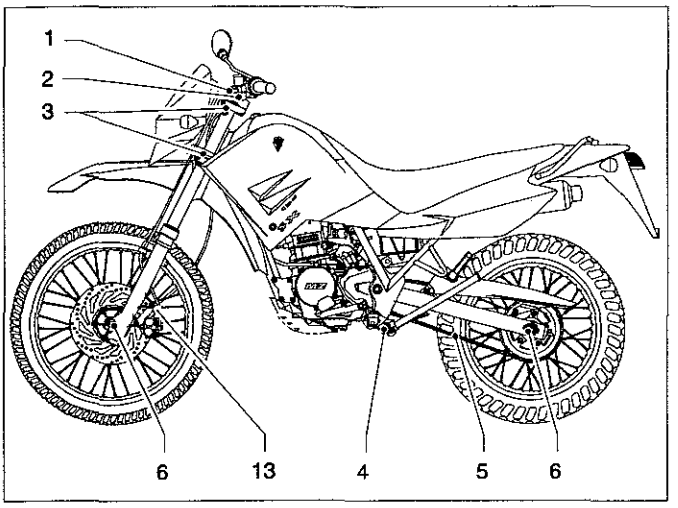

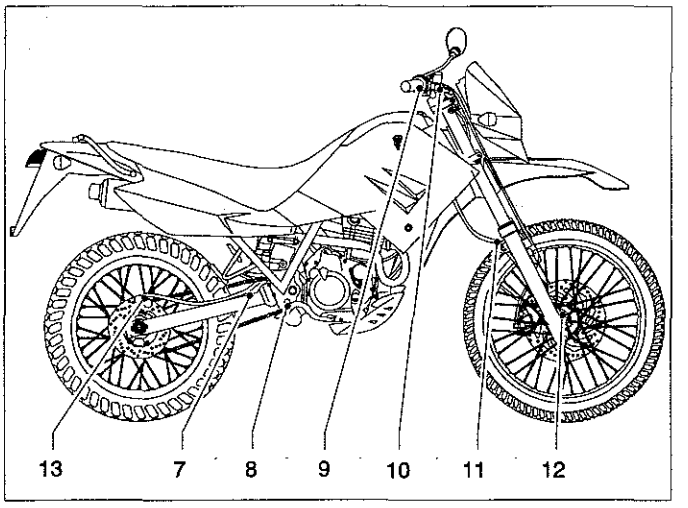

Lubrication Points		Lubricant
1	Clutch Lever	Oil
2	Bowden cables	Oil
3	Steering bearing	roller bearing grease
4	Side stand bearing	roller bearing grease
5	Chain	chain spray for O-ring chains
6	Wheel Bearing	roller bearing grease
7	Ball joint on the shock-absorbing leg, bottom	Grease or spray (MoS_2)
8	Brake pedal	roller bearing grease
9	Throttle twist grip	roller bearing grease
10	Hand brake lever	roller bearing grease / oil
11	Speedometer drive	Oil
12	Speedometer drive in the front wheel	roller bearing grease
13	Brake caliper sliding pin	grease MoS_2

2.4 Special Tools

The term "special tool" is abbreviated in the text as "ST".

Number	Part Number	Designation	
1	8999200000	Locking bolt, Crankshaft	
2	8999201000	Sleeve for Valve shaft seal	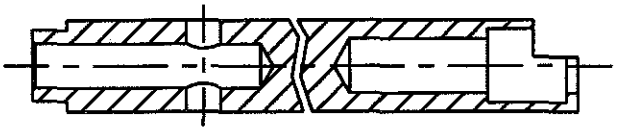
3	8999202000	Piston installation plate	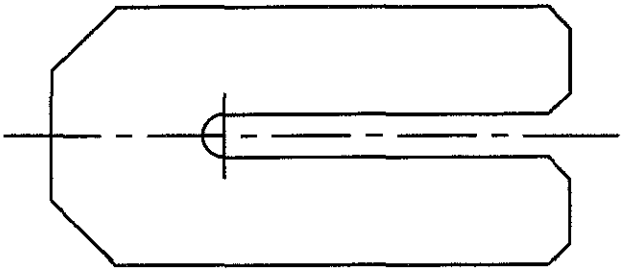
4	8999203000	Pick-up adjusting tool	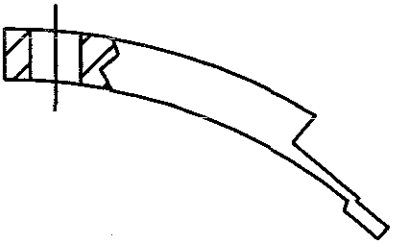
5	8999204000	Locking tool Clutch	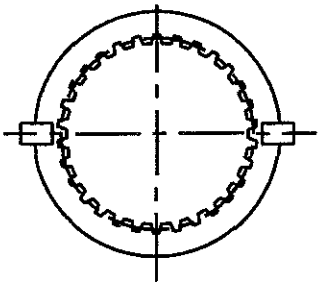
6	8999205000	Alternator rotor removal tool	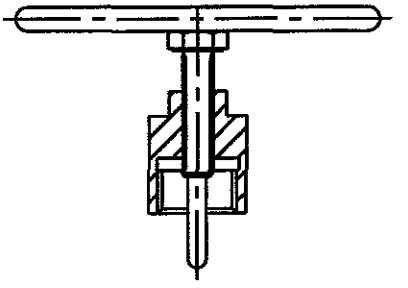

Number	Part Number	Designation	
7	8999206000	Camshaft locking tool	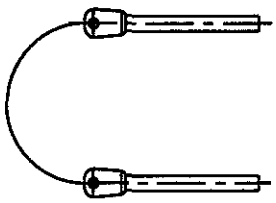
8	8999207000	Casing halves separator tool	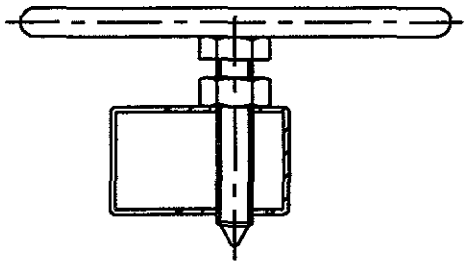
9	8999208000	Brace for index lever	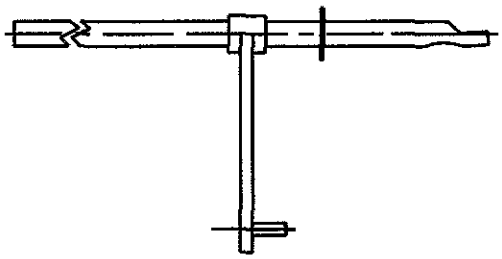
10	8999209000	Installation sleeve for left crankshaft	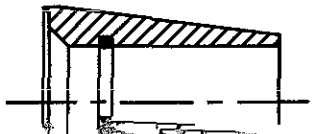

2.5 Tightening torques

Tighten all screws and nuts after 1000 km (2 months), then every 6000 km.
The nuts, screws and bolts listed in the following table are important safety parts. They should be tightened with the specified torque as necessary, using a torque spanner.
Micro encapsulated screws reused after removal must be secured using Loctite 243.

2.5.1 Chassis

Designation	Thread	Tightening Torque (Nm)	Fuse
Steering tube bolt	M24x1	80^{+10}	
Fork bridge, top locking screw	M8	25^{+5}	
Fork bridge, bottom locking screw	M8	25^{+5}	
Front brake caliper	M8	25^{+5}	
Rear axle	M16	100^{+10}	
Rear brake caliper screw	M8	25^{+5}	Loctite 290
Rear brake caliper, screw plug locking bolt	M10x1	4^{+1}	
Brake pad locking bolt	M10x1	6^{+5}	
Brake caliper sliding pin		15^{+5}	
Swing bearing pin	M16	100^{+10}	
Side stand/bearing bracket	M6	5^{+2} Nm, then turn 90° back	
Top handlebar locking screw	M8	25^{+5}	
Front axle	M14x1,5	60^{+5}	
Front axle locking ring	M6	10^{+2}	
Brake hose, banjo bolt	M10x1	20^{+2}	
Ignition steering lock	M6	Break-off screws	
Rear brake disc	M6- mk	10^{+2}	micro-encapsulated
Front brake disc	M6- mk	10^{+2}	micro-encapsulated
Brake pedal	M6	10^{+2}	
Main brake cylinder, rear	M6	10^{+2}	
Engine mounting, rear	M10	40^{+5}	
Engine, front			
Plate/engine	M8	30^{+5}	
Plate/frame	M8	30^{+5}	

Designation	Thread	Tightening Torque (Nm)	Fuse
Chain wheel / drive	M8	30^{+5}	
Shock absorber mountings			
• top	M10	40^{+5}	
• bottom	M10	40^{+5}	
Exhaust pipe support/frame	M8	25^{+5}	
Exhaust clamp	M6	10^{+2}	
Exhaust flange/cylinder head	M6	3^{+1}	
Exhaust pipe support/exhaust	M10	30^{+5}	
Instrument mount/Front panel/ Indicator light	M6	$1{,}5^{+0{,}5}$	
Headlight	M6	6^{+1}	
Regulator mounting	M6	4^{+1}	
Securing instruments to mount	M6	4^{+1}	
Switch lever	M6	10^{+2}	
Front wheel mud guard	M6	6^{+1}	
Tank (rear)	M8	20^{+5}	
Fuel cock on tank	St 5,5	$1{,}5^{+0{,}5}$	
Spoiler/cooler	M6	6^{+1}	
Splash guard on intake muffler	M5	$0{,}5^{+0{,}5}$	
Splash guard on frame	M6	6^{+1}	
Side and rear panelling	M6	6^{+1}	

Designation	Thread	Tightening Torque (Nm)	Fuse
Clutch and brake handlebar mountings	M6	6^{+1}	
Throttle twist grip	M5	5^{+1}	
Direction indicators front/back	M6	$1{,}5^{+0{,}5}$	
Flasher mounting (rubber collar nut)	M4	20^{+10} Ncm	
Ignition box mounting	M5	70^{+10} Ncm	
Ignition coil mounting	M5	3^{+1}	
Horn	M6	8^{+1}	
Relay (rubber collar nut)	M4	10^{+10} Ncm	

2.5.2 Engine

Designation	Connection	Tightening Torque (Nm)	Fuse
Transmission bearing mounting plate, right	DIN 912-M6x12-8.8-mk	^{10}+2 Nm	micro-encapsulated
Housing screws	DIN 912-M6x30-8.8-ps si	^{10}+2 Nm	
Housing screws	DIN 912-M6x70-8.8-ps si	10^{+2} Nm	
Tension rod in housing	Stud bolt M8	13^{+3} Nm	
Cylinder head nut	DIN 6331-M8-10	22 Nm, then tighten by $80°^{+10°}$	
Timing chain shaft	DIN 912-M6x90-8.8	10^{+2} Nm	
Bearing cap piece nut	DIN 6923-M6-8	10^{+2} Nm	
Camshaft bolt	DIN 931-M8x25-10.9	30^{+2} Nm	Loctite 243
Screw, sliding rail	M6 screw	10^{+2} Nm	Loctite 243
Bolt, index lever	M6 bolt	8^{+2} Nm	Loctite 243
Oil pump screw	DIN 912-M6x25-8.8-mk	10^{+2} Nm	micro-encapsulated
Water pump screw	DIN 912-M6x20-8.8-mk	10^{+2} Nm	micro-encapsulated
Primary gear nut	DIN 936-M16x1.5-22H left	78^{+4} Nm	
Clutch dog nut	DIN 934-M12x1-10	58^{+4} Nm	
Free-wheel countersunk screw	DIN 7991-M6x35-10.9	8^{+2} Nm	Loctite 243
Cover screw, right	DIN 912-M6x30-8.8-ps si	10^{+2} Nm	
Cover screw, right	DIN 912-M6x50-8.8-ps si	10^{+2} Nm	
Oil filter cover screw	DIN 912-M6x20-8.8-ps si	8^{+2} Nm	
Oil return plug	ISO 7379-10 M8x30-12.9-f9 ps si	8^{+2} Nm	
Cover screw, left	DIN 912-M6x30-8.8-ps si	10^{+2} Nm	

Designation	Connection	Tightening Torque (Nm)	Fuse
Cover screw, left	DIN 912-M6x40-8.8-ps si	10^{+2} Nm	
Clutch springs screw	264M31 A15921	5^{+1} Nm	
Air intake fitting screw	DIN 912-M6x20-8.8-ps si	8^{+2} Nm	
Idling switch		10^{+2} Nm	
Oil pressure switch	M10x1	10^{+2} Nm	
Thermal switch		13^{+2} Nm	
Decoupler	EEZ HD 190, 13965.00.3	8^{+2} Nm	
Rotor screw	DIN 933-M8x20-10.9-A4K-mk	26^{+4} Nm	micro-encapsulated
Stator screw	DIN 912-M5x25-8.8-A4K-mk	5^{+2} Nm	micro-encapsulated
Pick-up screw	DIN 912-M5x12-8.8-A4K-mk	5^{+2} Nm	micro-encapsulated
E-starter screw	DIN 912-M6x30-8.8-ps si	8^{+2} Nm	
Oil return plug		20^{+5} Nm	
Oil screen screw cap	DIN 910-M18x1.5-A4K	30^{+5} Nm	
Chain adjuster locking screw	DIN 908 M18x1.5	15^{+5} Nm	
Crankshaft locking screw	DIN 912-M8x20-8.8-A4K	10^{+2} Nm	
Spark plug	NGK CR 8 E	10^{+2} Nm	
Clutch cable counter bearing screw	ISO-7380-M6x10-10.9-ps si	10^{+2} Nm	
Clutch activation shaft locking screw	DIN 6912-M5x20-8.8-ps si	5^{+2} Nm	Loctite 243 and colour markings
Clutch activation lever screw	ISO 7380-M6x10-10.9-ps si	8^{+2} Nm	
Support plate mounting screw for alternator cable	ISO 7380-M5x6-A4K	5^{+2} Nm	
Carburettor mounting nut	DIN 985-M6-8-A4K, nut	8^{+2} Nm	
Bearing cap piece stud bolt	DIN 835-M6x30-8.8	6^{+4} Nm	
Exhaust stud bolt	DIN 835-M6x30-8.8-A4K	5^{+2} Nm	
Chain wheel nut	M16x1	70^{+5} Nm	Locking plate
Cable holder screw	flat mushroom head screw M5x10-10.9-A4K	5^{+2} Nm	

3 Chassis

3.1 Seat

Removal

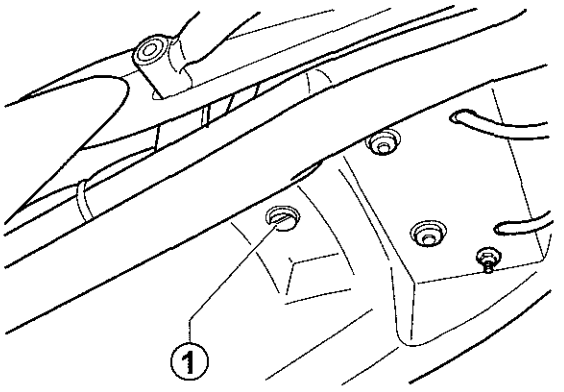

1. Turn out peg (1) (bayonet joint) beyond the seat.
2. Raise the seat backward and lift it up and off.

Inspection

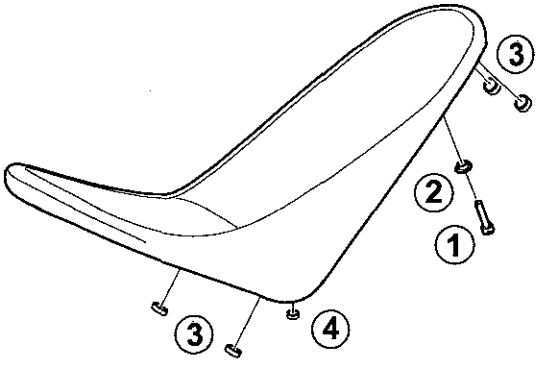

Inspect the support elements (3, 4) for wear and porosity. Replace defective parts.

Installation

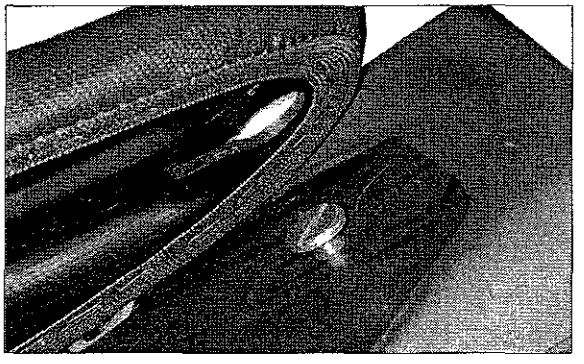

1. Snap in the opening beyond the seat under the screw on the fuel tank and slide it forward.
2. Pressing lightly on the seat, screw the peg (1) in the collar brushing (2).

3.2 Locking Hoop

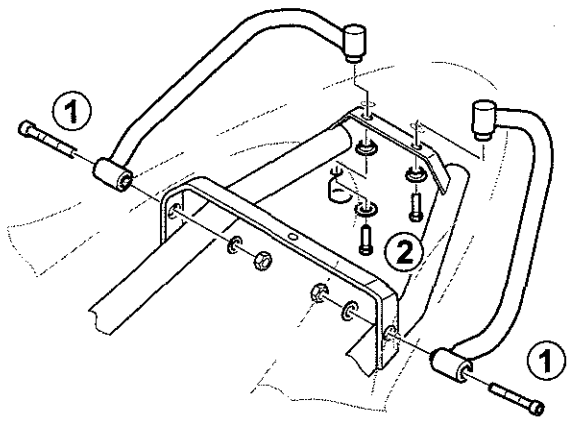

Removal

During remove take care that the rear panelling won't be damaged.

1. Unscrew the cylinder screws(1) on both sides.
2. Unscrew both hexagon head screws (2).
3. Remove the support bracket from the panelling.

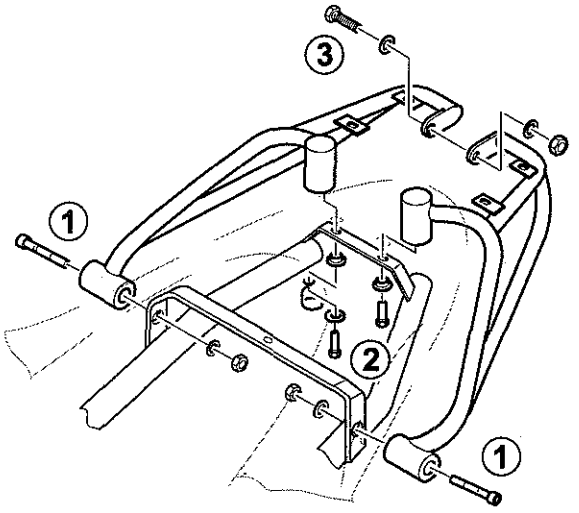

4. In addition, loosen the hexagon head screw (3) when the vehicle is equipped with a top case carrier.

Installation

Install in reverse order.
Also install the cable holder during mounting the right-hand support bracket.

3.3 Side Panelling

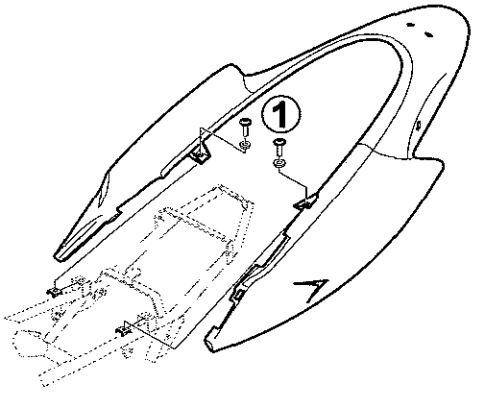

1. Remove seat.
2. Remove the right and left-hand spoiler.
3. Dismount the support bracket (or the top case carrier).
4. Unscrew both oval flange head screws (2).
5. Remove the side panel.

Installation

Install in reverse order.
To do this, insert the tappet on the tank spoilers into the cutouts of the side panelling.

3.4 Fuel Tank

Hazard!

Risk of fire and explosion!

Fuel is a flammable liquid of hazard class A1 and therefore an extreme fire risk. Fuel fumes are highly explosive.

Exercise maximum care when working with fuel and other easily flammable substances!

Only work with the engine switched off and in well ventilated areas. No smoking! Keep flames and sparks away from the entire work area.

Completely empty the fuel tank, using only containers intended for this purpose. Explosive gas fumes remain in the fuel tank even after it has been completely drained!

Leaked or drained flammable liquids must be collected immediately, removed from the working area and stored in an appropriate location until final disposal.

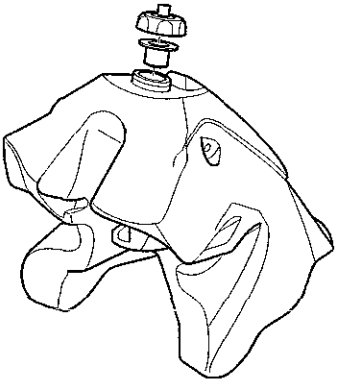

The fuel tank is made of plastic (polyethylene PE Marlex).
Defective fuel tanks cannot be repaired.
They must be replaced.
The tank volume is approx. 12.5 l.

Removal

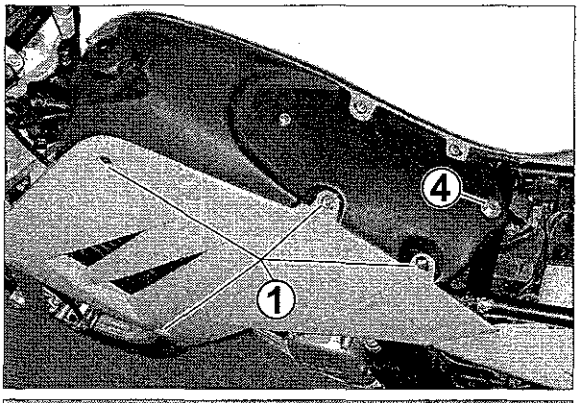

1. Close the filter valve.
2. Remove seat.
3. Unscrew four oval flange head screws (1) on both sides and remove the tank spoiler.
   Place the spoilers so that they will not be damaged.

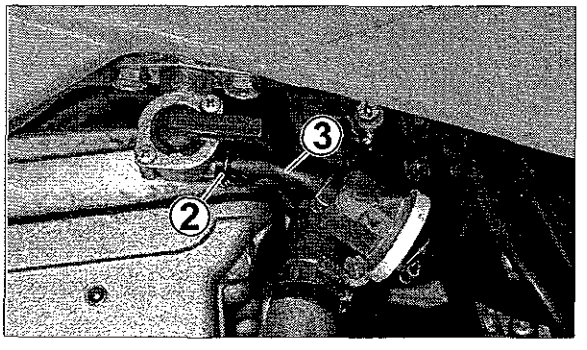

4. Loosen the clamp (2) and pull out the fuel hose.
   Collect any fuel that runs out.
5. Unscrew the hexagon nuts (4).
6. Hold the fuel tank by the grip in the lower rear, pull it away from the tank support and pull it off diagonally up and back.

Inspection

Inspect the following parts and replace, if necessary:

- Operating elements of the fuel tank,
- Filter valve with O-ring, fuel hose,
- Front fuel tank mount,
- Tank cap and seal,
- Bushing and damping ring on left and right of the frame,
- Tight fitting of the pan head screw on the tank.

Installation

Install in reverse order.

3.4.1 Filter Valve

Removal

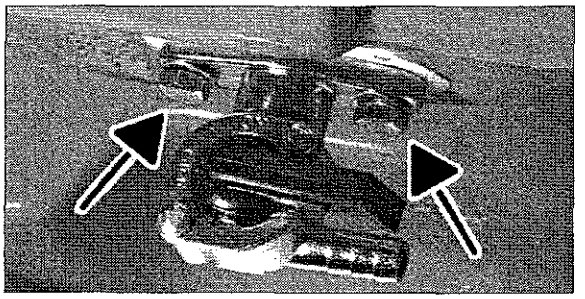

1. Empty the fuel tank.
   To do so, connect the hose to the filter valve, open the filter valve and let the fuel drain into a suitable container.
2. Unscrew two hexagon sheet metal screws St 5,5.
3. Pull out the filter valve.

Screen

Attention!

Possible eye injury!
Always wear protective goggles when working with compressed air!

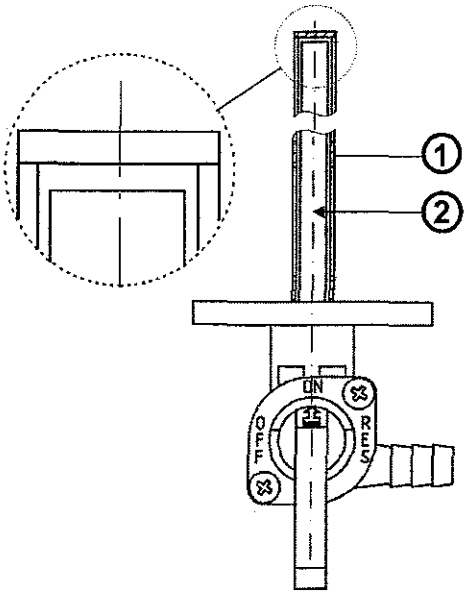

1. Separate the screen (1) from the filter valve by turning it to the left.
2. Rinse out with engine cleaner and dry with compressed air.
3. Insert the screen into the filter valve, turn to the right to tighten.

Note:

There must be space between the inside pipe (2) and the screen. Otherwise, no fuel can flow through the filter pipe. Operation is then only possible in the reserve setting of the filter valve (RES).

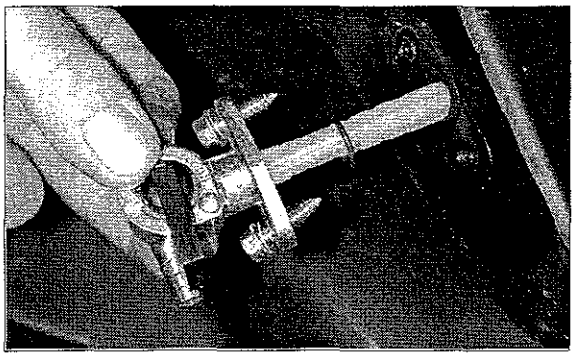

Installation

Always use the specified seal ring (oil- and fuel-resistant O-ring)! The seal surface of the filter valve/fuel tank and the threading must be undamaged. Otherwise the fuel tank must be replaced! The filter valve must sit flat on the seal surface.

3.4.2 Tank Cap

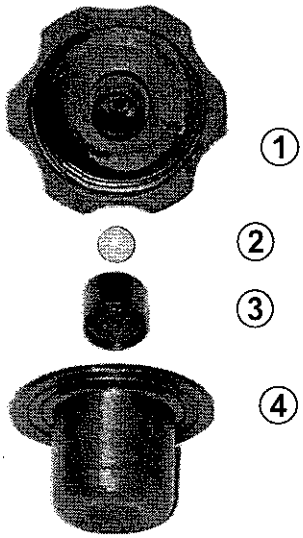

If a noticeable negative pressure exists upon removing the tank cap, the vent on the top of the tank cap is dirty. The fuel can no longer flow out, the engine performance is reduced.
When the vehicle tipped over, the ball (2) shall prevent the fuel to flow out through the vent in the cap.

(1) Closure cover
(2) Ball
(3) Vent cap
(4) Seal

Removal

1. Remove the tank cap by turning it to the left.
2. Pull out seal (4).
3. Remove the ball and inspect the components.

Inspection

- Examine seals (3) and (4) for damage and porosity
- Clear vent hole in the cap (1)

Installation

Install in reverse order.

3.4.3 Fuel Filter

The external fuel filter will be inspected in the same intervals as the screen in the filter valve for dirt.
If the screen is visible dirty or water it must be replaced.

1. Close the filter valve.
2. Open the clamps, pull off the fuel hoses from the fuel filter.
3. Insert a new fuel filter.

3.5 Lighting/Signal System

Always remove the fuses before performing work on the electrical installation.

The lighting/signal system includes:
Headlight, parking light, tail light, indicator lights, control lights and horn.
Defective bulbs may only be replaced with the specified bulbs.

3.5.1 Headlight

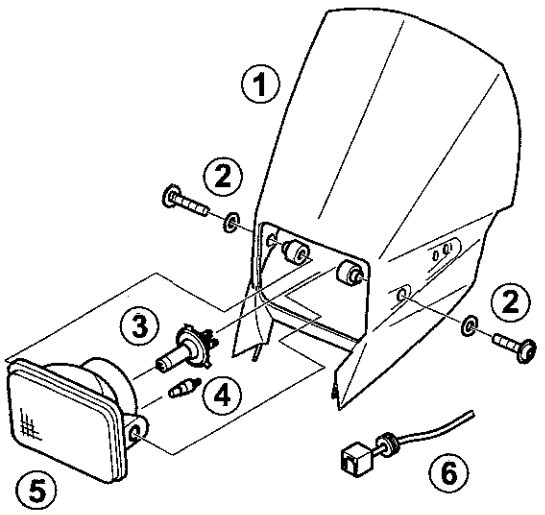

The headlight is installed in the front panelling.

(1) Front panelling
(2) Two oval flange head screws with nylon washers
(3) Bulb, type: H4-12V-60/55W
(4) Wedge base bulb 5 W 4x12 d 12V 5W
(5) Headlight with bulb socket
(6) Cable harness

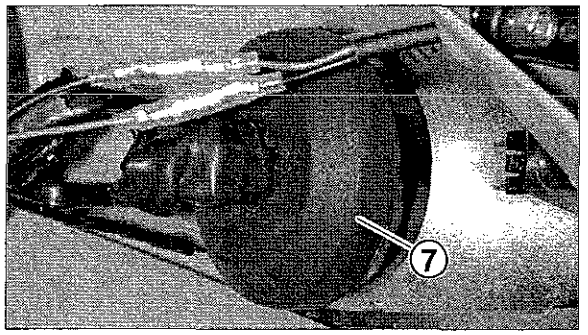

Removal

1. Remove the oval flange head screws (2) with shim plates.
2. Remove the headlight reflector (5).
3. Disconnect the connection cable (6) from the bulb.
4. Pull off the rubber cap (6) from the headlight reflector.
5. Remove the bulb (3).
6. Check the terminals and clean if necessary.
   The ends of the cable must be clean and tightly clamped in.

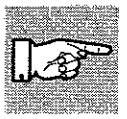

Note:

The terminals may tear off when removing the bulb from the cable. Always hold the bulb by the socket.
Individual wires of the flexible cable must not be split! In this case, the fault must be corrected and the plug remounted.

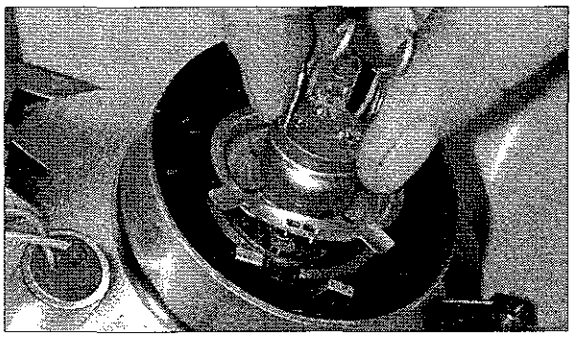

Installation

1. Insert new bulbs with the nose into the guide on the reflector.
   The screen on the lamp must point upward.

Attention!

Inspect the terminals of the connection cable and clean, if necessary.
Loose, corroded or contaminated terminals result in loss of power. The illumination is reduced.

Do not touch the glass parts of the bulb with bare fingers. Carefully clean the bulb glass with a clean, fibre-free rag and a suitable solvent (e.g. alcohol).

2. Fit the rubber cap.
3. Connect the connection cable and mount the reflector.
4. Perform a function test.
5. Adjust the headlight, if necessary.

Replace the wedge base bulb (parking light).

Type:Wedge base bulb W 2.1x9.5 d 12V 5W

Note:

The terminals may tear off when removing the bulb from the cable. Always hold the bulb by the socket.
Individual wires of the flexible cable must not be split! In this case, the fault must be corrected and the plug remounted.

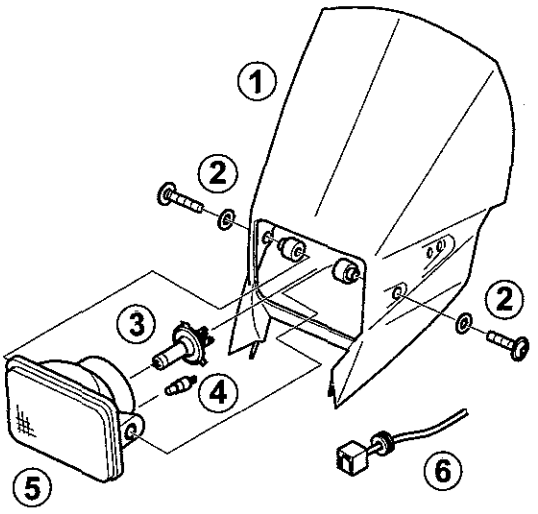

1. Remove the headlight (5).
2. Hold the wedge base bulb (4) by the socket and pull it out.
3. Insert a new wedge base bulb.
4. Mount the reflector.
5. Function test.

3.5.2 Turn Indicator Lights

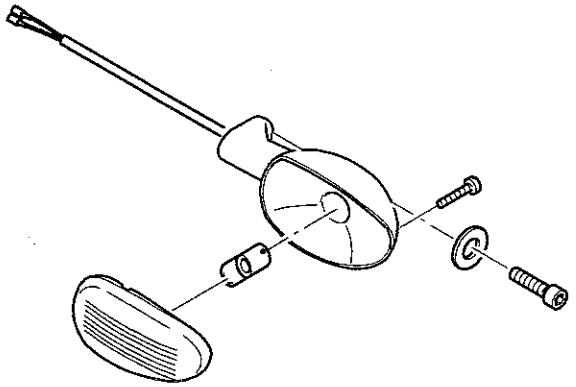

All four turn indicator lights are almost identical.
The difference is in the location of the water run-off notch on the light housing and in the connection cable.
The water run-off notches must always face downward when installed so that water can flow away.
Perform the same work steps for all four turn indicator lights.

Changing the bulb

Type:19/10-12 V/10 W

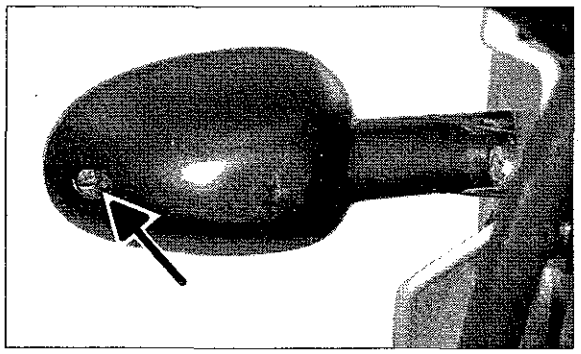

1. Unscrew the screw on the rear side.
2. Remove the light emission lens.

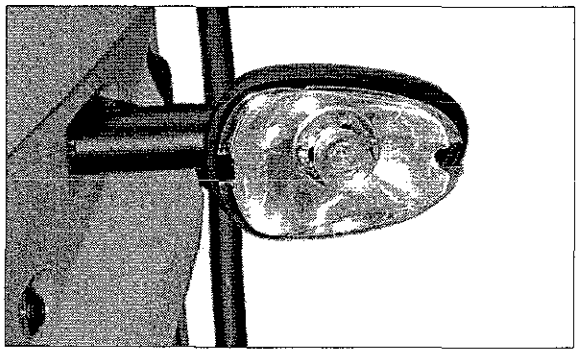

3. Turn the bulb slightly to remove it.
4. Check the terminals and clean if necessary.
   The ends of the cable must be clean and tightly clamped in.
5. Insert the new bulb, turning slightly, and check that it sits tightly.
6. Install the light emission lens.

Turn indicator light housing

Removal

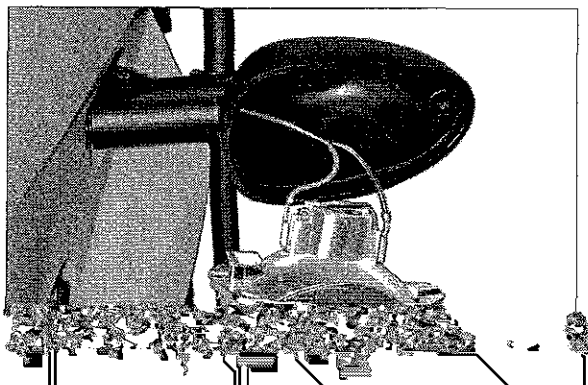

1. Unscrew the cable from the negative pole on the battery.
2. Remove the light emission lens.
3. Note the connection locations.
   Pull out the cable and remove the reflector.
4. Pull the cable out of the light housing through the indicator light rod.

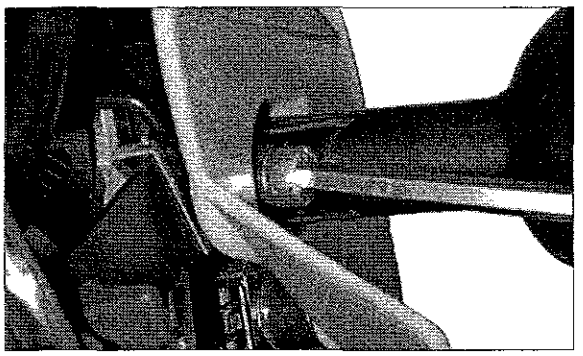

5. Unscrew the hexagon socket head screw, remove the housing.

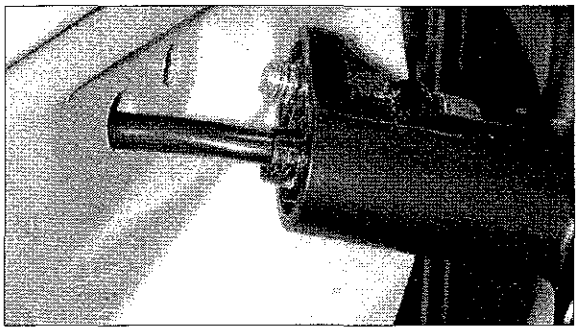

Installation

1. Insert the cable protector into the guide.
2. Screw on the housing.
3. Run the cable through the indicator light rod.
4. Connect the cable and insert the reflector.
5. Install the light emission lens.
6. Perform a function test.

3.5.3 Headlight Casing

Removal

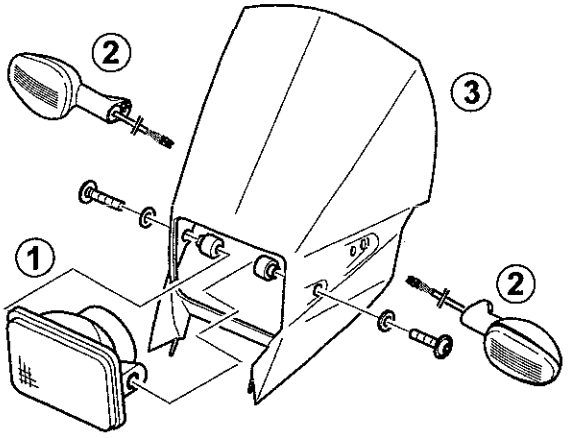

1. Unscrew the two oval flange head screws of the headlight fixing on both sides, remove the headlight (1) and pull off the connecting cable from the bulb.
2. Dismount the turn indicators (2) on both sides.
   Make certain that the tapping nut do not fall out of the bracket of the rubber holders.
3. Pull the headlight housing from the front mud guard.

Installation

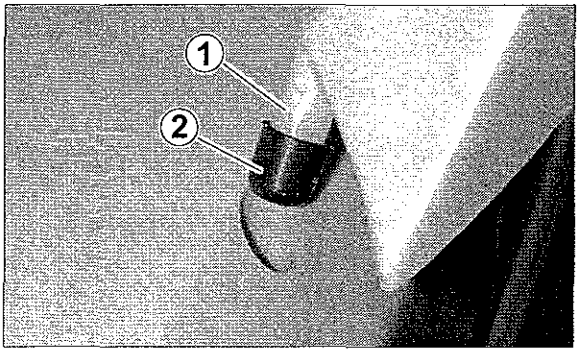

Install in reverse order.
Inspect the rubber holders of the headlight mask and replace, if necessary.

1. Insert the headlight housing with the nose into the mud guard.
2. Mont the turn indicators and the headlight.
3. Perform a function test and adjust the headlight (see 3.5.4 "Adjusting the Headlight").

Tightening torque:

Oval flange head screws:	6^{+1} Nm
Turn indicator pan-head screw:	$1.5^{+0,9}$ Nm

3.5.4 Adjusting the Headlight

Attention!

Headlights set too high blind other people in traffic and may lead to accidents.
The headlight must always be correctly adjusted according to the typical load!
The headlight must be readjusted after changes in the spring tension of the shock absorber or other load changes!

Special adjustment tools are available for adjusting the headlight. If these devices are used, the manufacturer instructions must be followed.

To manually adjust the headlight, do the following:

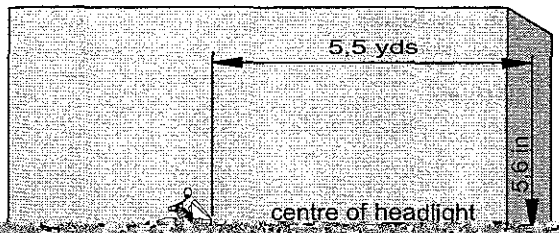

1. Position the vehicle on a flat surface 5 m in front of a vertical wall and load with a person weighing approx. 75 kg.
   Do not use the installation stand.
2. Measure the distance from the centre of the headlight to the ground.
3. Loosen the mounting screws of the headlight by about two turns.

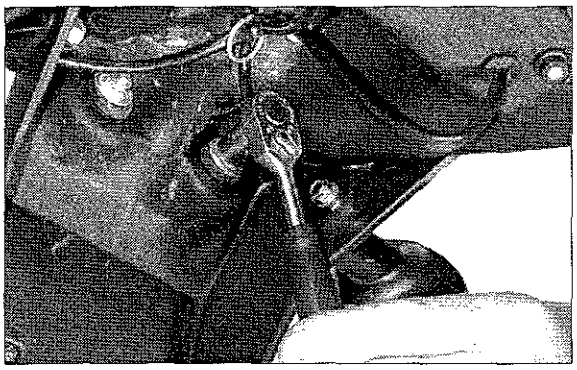

3. Unscrew the two hexagon nuts M6 beyond the rear wheel mud guard, remove the sleeves and the washers.
4. Remove the rear light, inspect and replace, if necessary.
5. Disconnect the terminals.
6. Inspect the rubber seal, replace if necessary.

Note:

Make note of the cable connection locations.
Danger of short-circuits! The terminals must not touch each other.

Installation

1. Insert the rubber seal.
2. Mount the tail light housing and screw it on.
3. Check the terminals and clean if necessary.
   The ends of the cable must be clean and tightly clamped in.
4. Connect the cable.
5. Insert a bulb.
6. Screw on the light emission lens.
7. Perform a function test.

3.5.6 Ignition Steering Lock

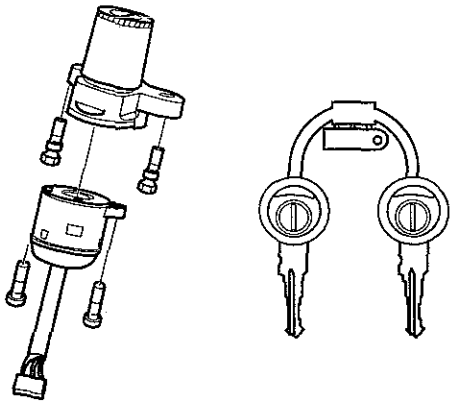

Every lock has a code number used by MZ to manufacture new keys.
If this code number is no longer available, providing the VIN (Vehicle Identification Number), located on the right side of the steering head pipe) will make it possible for MZ to create a new key.

Lock maintenance

The ignition steering lock must be treated with a suitable care agent, depending on the usage conditions.
A frozen lock must be thawed before use. Otherwise the key may break off.

3.6 Instruments

3.6.1 Speedometer and Lighting

Removal

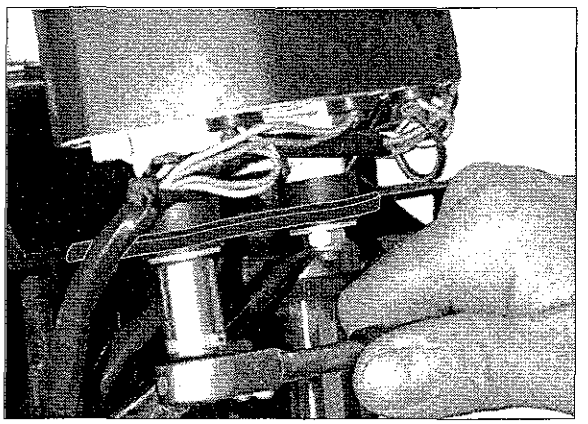

Always remove the fuses before performing work on the electrical installations.

1. Dismantle the front panelling with the headlight (see 3.5.1 "Headlight").
2. Screw off the speedometer shaft of the speedometer.
3. Unscrew the hexagon nuts of the instrument mount, remove the washers.
4. Pull the speedometer out of the instrument mount.
5. Draw out defective wedge base bulbs from the socket and replace (type 12V - 1,2W).

Installation

Note:

When installing the speedometer, the speedometer shaft should also be lubricated with oil.

1. Inspect the wedge base bulb and replace, if necessary.
2. Coat the socket with silicon spray and insert it.
3. Mount the speedometer and screw in the speedometer shaft.
4. Fit the front panelling, the headlight and the turn indicator lights.
5. Adjust the headlight.

3.6.2 Indication Lights

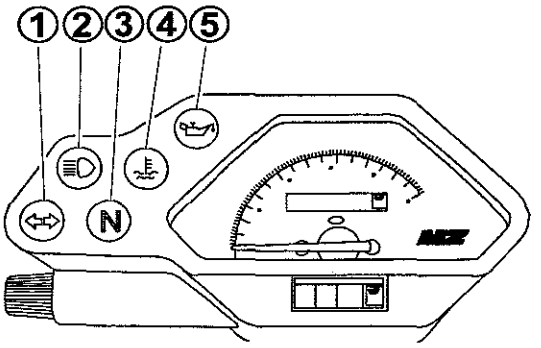

(1) Turn indicator light
(2) Headlight control
(3) Idler control
(4) Warning light for cooling system
(5) Warning light „Oil pressure too low"

Change

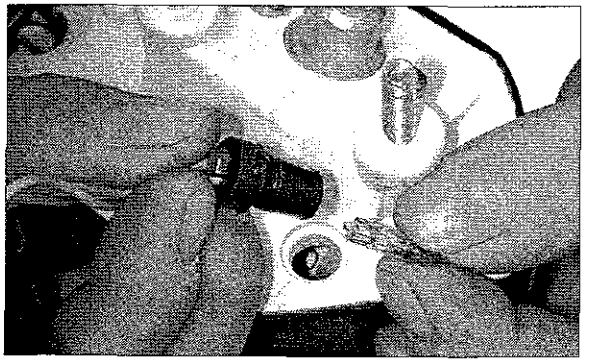

1. Pull the control light socket out off the tachometer. Do not pull on the cable!
2. Pull the defective bulb out by the socket.
3. Check the terminals and clean if necessary. The ends of the cable must be clean and tightly clamped in the socket.
4. Insert the new control light into the socket.
5. Insert the socket into the speedometer.

3.6.3 Reset Button

Normally the reset button will not be removed. If it is defective, replace the speedometer.
In special cases, the button can be removed using the method described below.

Removal

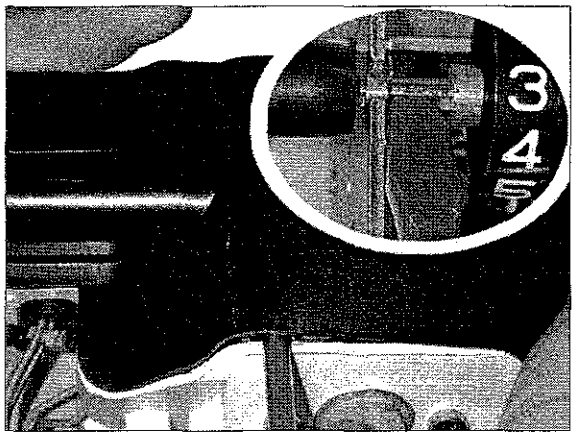

1. Unscrew the 3 screws 2,2x16 from the speedometer mounting plate.
2. Slide an appropriate screw driver between the speedometer mounting plate and the housing.
3. Insert the screw driver blade into slot of the axle bearing the reset button (see expanded scope).
4. Turn the reset button in clockwise direction (left-handed threading).
   To do this, hold the screw driver still.
5. Pull the reset button out.

Installation

Install in reverse order.

3.6.4 Instrument Mount

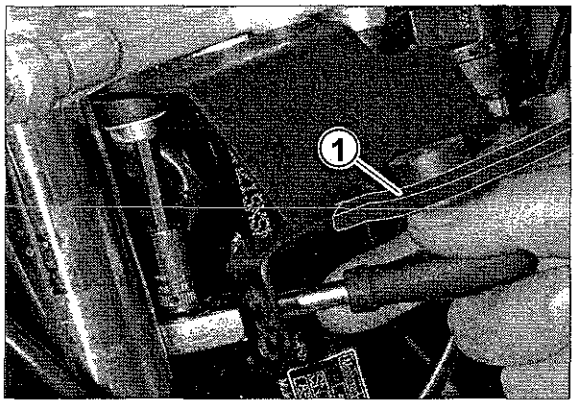

1. Remove the headlight and speedometer.
2. Loosen both M6 screws.
3. Remove the instrument mount.
4. Inspect the edge protection strip (1) 60 mm, replace if necessary.

Installation

Install in reverse order.

3.7 Ignition Lock

Removal

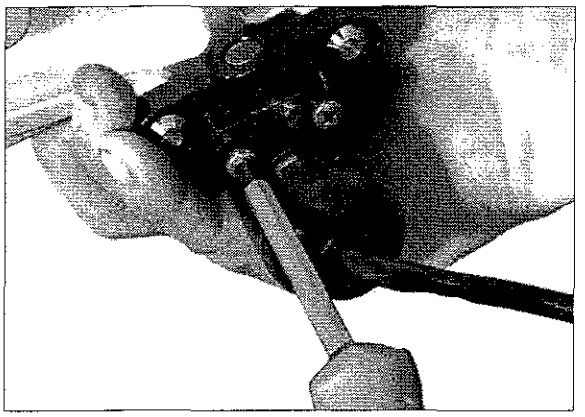

1. Remove the front panelling
2. Remove the instrument mount.
3. Remove the upper fork bridge.
4. Unscrew the switch from the lock.

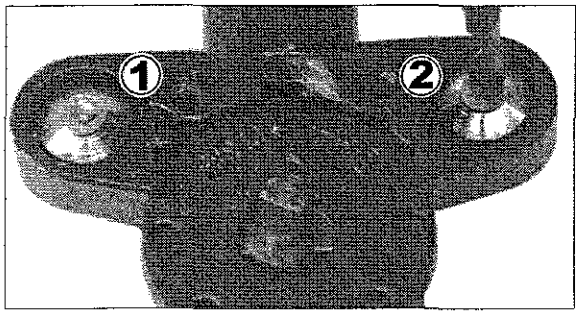

5. Mark the centres of the break-off screws (1).
6. Drill out the break-off screws (2).
7. Remove the ignition lock.
8. Heat up the stalk for the screws in the fork bridge to approx. 80°C to liquefy the screw locking agent.
9. Remove the remaining thread pieces with a pliers.

Installation

1. Rethread both M8 thread pieces.

Note:

If the threading pieces are not rethreaded, the screws may break off before the ignition lock is firmly in place.
Then the work must be performed again.

2. Clean the threads.
3. Apply the screw locking agent at „medium tightness" to the new break-off screws, screw on the lock.
4. Screw on the lock.
   Screw in the break-off screws until the screw head breaks off.
5. Place the switch on the ignition lock and screw it on.
   The locking pins must fit exactly into the lock.
6. Fit the upper fork bridge with the speedometer, tighten the clamping screws.
7. Mount the handlebar.
8. Connect the ignition steering switch cable to the cable harness.
9. Mount the front panelling.
10. Function test:
    - electrical installation
    - front wheel braking function
    - ignition switch
    - locking of the ignition steering switch locking mechanism
    - easy motion of the steering bearing

3.8 Front Wheel Mud Guard

Removal

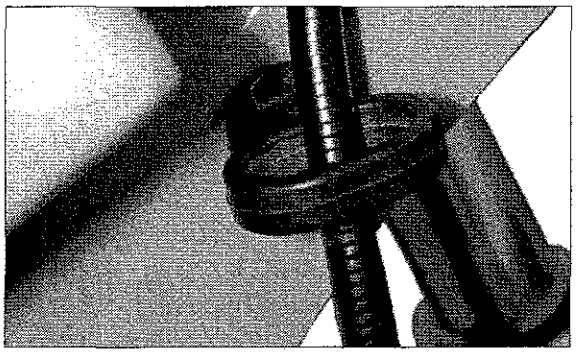

1. Pull the guide eyelet of the speedometer shaft turning it.

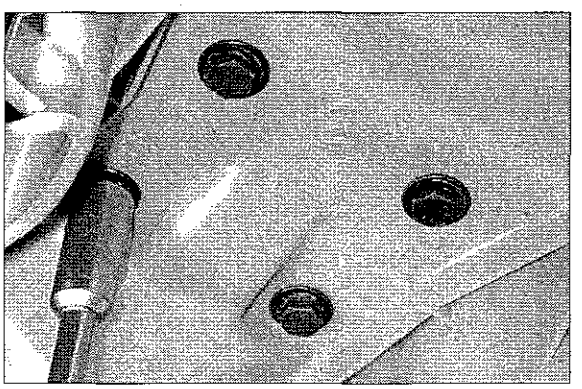

2. Unscrew the four M6 screws.
3. Pull the front wheel mud guard out of the noses (1) of the front panelling and remove it from the sliding pipes.

Installation

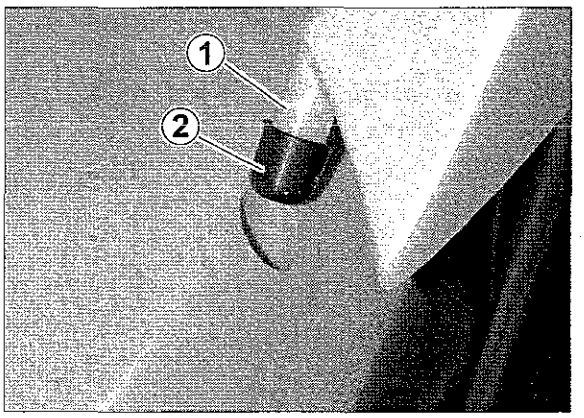

1. Slide the front wheel mud guard between the sliding pipes and press it onto the noses (1) with plastic caps (2).
2. Insert the collar brushing into the front wheel mud guard from below and screw on the front wheel mud guard to the lower fork bridge.
3. Insert the guide eyelet.

3.9 Rear Wheel Mud Guard

3.9.1 Rear Wheel Mud Guard

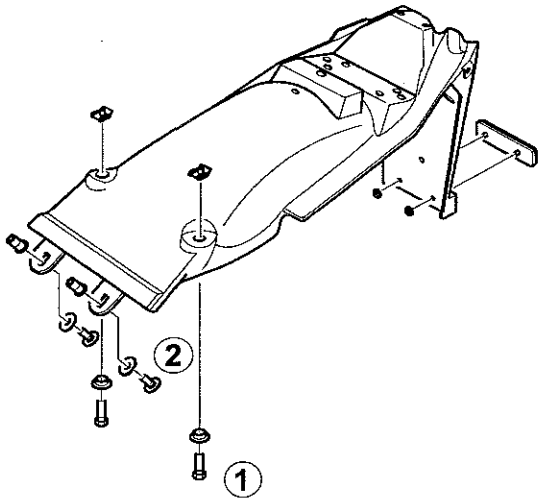

Removal

1. Remove the seat (see 3.1 "Seat").
2. Remove locking hoop (see 3.2 "Locking Hoop").
3. Disconnect the cable from the tail light (see 3.5.5 "Tail Light").
   If the tail light is not being replaced, it may remain in the mud guard.
4. Open the turn indicator light, disconnect the cable from the terminals and pull the cable out of the indicator light rod.
5. Remove the electronic components the in the rear part.
6. Unscrew both hexagon head screws (1).
7. Unscrew the both oval flange head screws (2).
8. Remove the rear wheel mud guard.

Remove the indicator lights and tail light, if necessary.

Installation

Install in reverse order.

3.9.2 Rear Reflector

Removal

It is useful (but not necessary) to remove the end piece when

3.10 Handlebar

3.10.1 Mirror

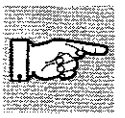

Note:

Correctly adjusted mirrors improve driving safety.
The mirror must be adjusted individually for every rider.

The work steps apply to both mirrors.

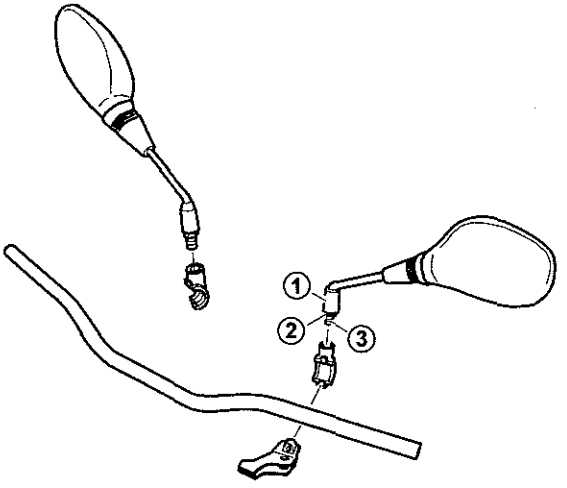

1. Slide up the rubber sleeve (1), loosen the lock nut (1) (spanner size 14).
2. Unscrew the mirror.
3. Grease the threads (3).
   The grease protects the threads against corrosion.
4. Screw on the mirror.
5. Adjust the mirror and tighten the lock nut (2).
6. Slide on the rubber sleeve (1).

3.10.2 Bowden cables

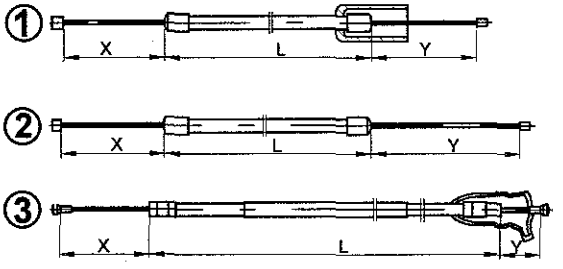

The following bowden cables are installed on the handlebar:

- Throttle cable (1): l = 850+3 mm, x+y = 140±1 mm
- Starter cable (2): l = 910-2 mm, x+y = 100-2 mm
- Clutch cable (3): l = 850+3 mm, x+y = 120+2 mm

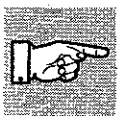

Note:

Bowden cables must have freedom of motion in every position.
They must not be cramped or kinked!
Bowden cable must not be pre-tensioned, that is they must not apply force when not in use (e.g. grinding clutch, etc.).

Maintenance

The bowden cables must not tear under the required operation forces and they most be easily moved. For this reason, they must be inspected and maintained in regular intervals (see maintenance intervals).
To ensure good sliding action, the inside of the bowden cable sheaths are coated with Teflon.
For lubrication, use an oil that does not attack Teflon (e.g.: thin silicon oil).

3.10.3 Throttle Twist Grip

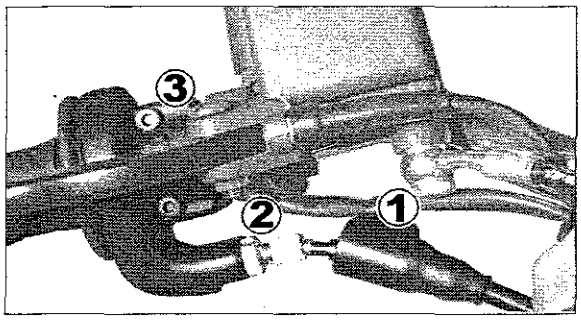

Removal

1. Slide back the rubber cap (1).
2. Loosen the lock nut(2) , screw the adjusting screw into the throttle grip.
3. Unscrew the two hexagon socket head screws (3).
4. Remove the throttle twist grip and dismantle.
5. Disconnect the bowden cable.

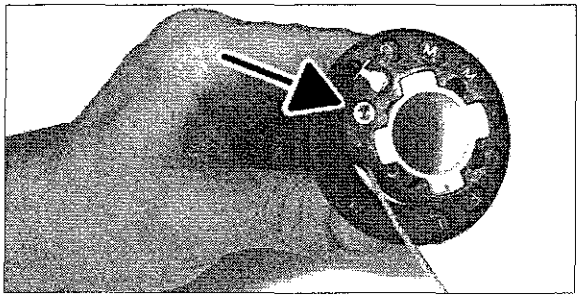

Installation

1. Inspect the connector pieces for damage and replace, if necessary.
2. Connect the bowden cable to the left hole (overhead view, holes face upward) of the connecting part.
   If the right hole is used, the bowden cable is too short.
3. Lubricate the steering pipe, slide on the throttle grip.
   Do not use grease, it reduces the twisting freedom.

3.10.4 Rubber Grips

Right rubber grip (throttle twist grip)

1. Cut through the rubber grip and remove it.
2. Slide on a new rubber piece with a suitable rubber adhesive.

Left rubber grip

Attention!

Always wear protective goggles when working with compressed air.

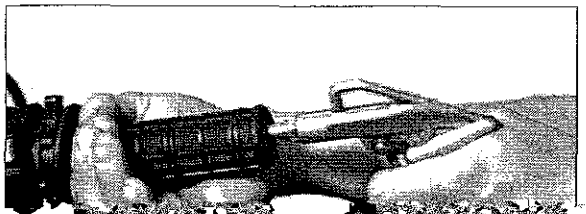

1. Make a small hole in the front side of the rubber piece using a needle.
2. Insert the compressed air gun.
3. Loosen the rubber piece from the handlebar using compressed air and remove it.

3.10.5 Handlebar

Removal

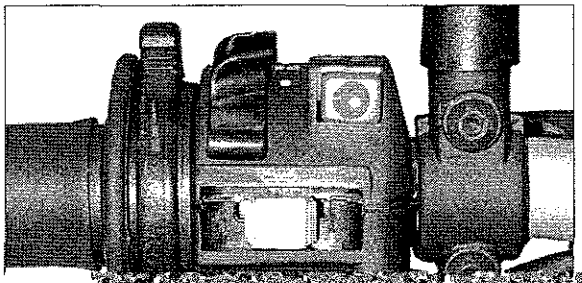

1. Remove the mounting clamp for the clutch mount and combination switch unit.
2. Remove the rubber grip, pull off the starting carburettor lever and washer.
3. Cut off the cable binder.

3.10.6 Swingarm

Handlebars are always delivered with mounted swingarms. The swingarm smoothes out vibrations in the handlebar that occur while riding. They are no wearing parts and normally need not be removed.

Removal

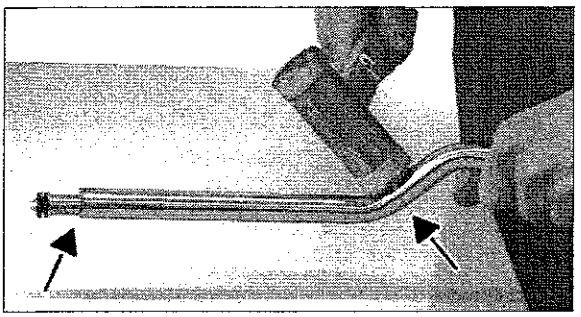

1. Remove the left rubber grip (see 3.10.4 "Rubber Grips").
2. Remove the handlebar (see 3.10.5 "Handlebar").
3. Carefully pound on the end of the handlebar and bend using a rubber or polyamide hammer.
   The hammering forces out the swingarm.

Installation

1. Insert the swingarm into the handlebar.
   The distance between the handlebar end and the swingarm end must be 25 mm.
2. Mount the handlebar.

3.10.7 Hand Brake Lever

Removal

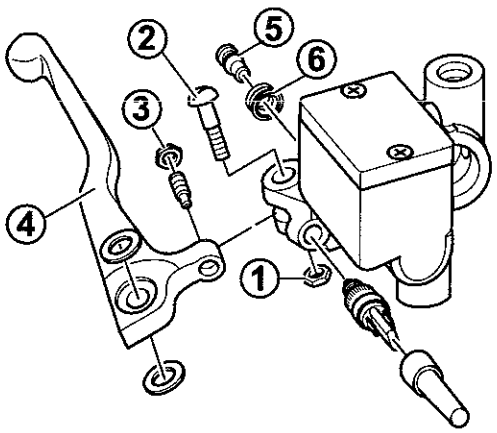

1. Unscrew the locking nut (1) and screw the slotted screw (2) off upward.
2. Loosen the locking nut (3) and unscrew the adjusting screw.
3. Remove the brake lever (4) with two washers.
4. Remove and inspect the pressure pins (5) and dust cover (6).

Installation

Install in reverse order.

3.10.8 Front Brake Light Switch

The brake light switch cannot be adjusted.

Removal

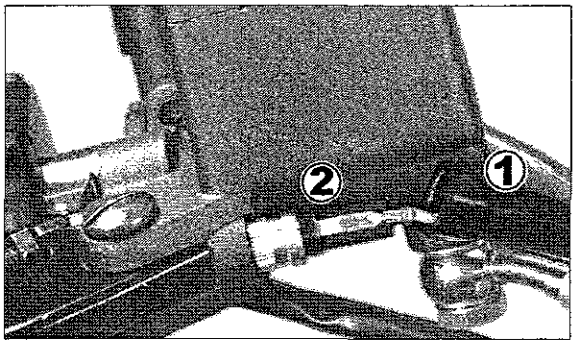

1. Remove the protective cap (1) from the brake light switch.
2. Pull out the two cables (2).
   Pull on the terminals, not the cable!
3. Unscrew the brake light switch with a pliers.

Inspection

Perform continuity check.
Brake lever not activated = switch open (no connection signal).

Installation

Install in reverse order.

3.10.9 Clutch Lever

Removal

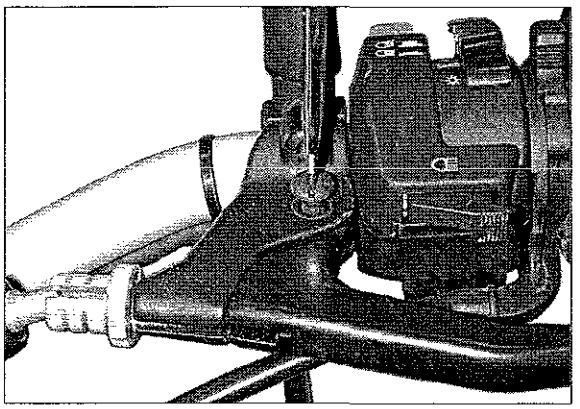

1. Slide back the protective cover from the adjusting screw.
2. Screw in the adjusting screw (maximum play).
3. Remove the screw and lock nut.
4. Push the lever forward.
5. Disconnect the bowden cable.

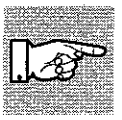

Note:

The cable pulley is slotted and may fall down during removal.

Inspection

Inspect the bushing, replace if necessary. Grease the cable pulley and the cable pulley chamber.

Installation

Install in reverse order.

3.10.10 Switch/Mount

Removal

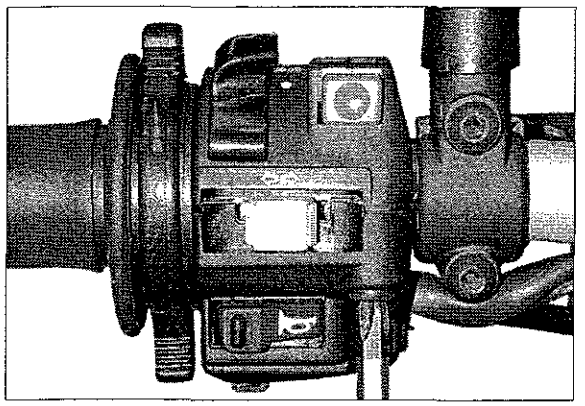

1. Unscrew the two screws in front and one in back.
2. Separate housing.
3. Remove switch.

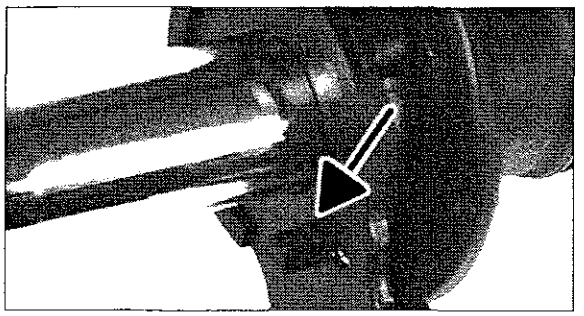

The starting carburettor lever is locked into the housing.

Installation

The pins of switch housing must snap into the opening of the handlebar pipe (position lock).

3.10.11 Starting Carburettor Lever

Removal

There are two options for replacing the starting carburettor lever:

1st option:

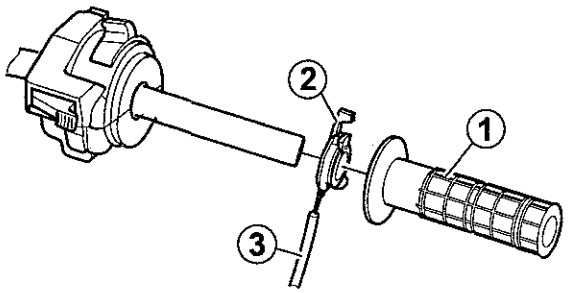

1. Remove the left rubber grip (1) (see 3.10.4 "Rubber Grips").
2. Pull off the starting carburettor lever (2) to the left.
3. Remove the starter bowden cable (3).

2nd option:

1. Remove all mounts from the handlebar (except for the left rubber grip).
2. Remove the handlebar.
3. Pull off the starting carburettor lever to the right.

Installation

Install in reverse order.
Grease the inside of the starting carburettor lever.

3.11 Air Filter

Attention!

Dust and dirt entering the engine increase wear on the piston and cylinder.
Only start the engine with an intact air filter.
Observe the specified replacing and cleaning schedule.

The air filter is located in the intake muffler under the seat. Its functioning has a significant influence on the composition of the fuel air mixture.
A dirty air filter leads to a fuel air mixture which is richer in fuel. The fuel consumption increases and the engine performance is reduced.
A defective air filter (e.g. filter paper torn) leads to a leaner (less fuel) fuel air mixture. The engine performance is reduced and damage may be caused due to overheating.

Removal

1. Remove the seat.
2. Lift up and remove the intake pipe.

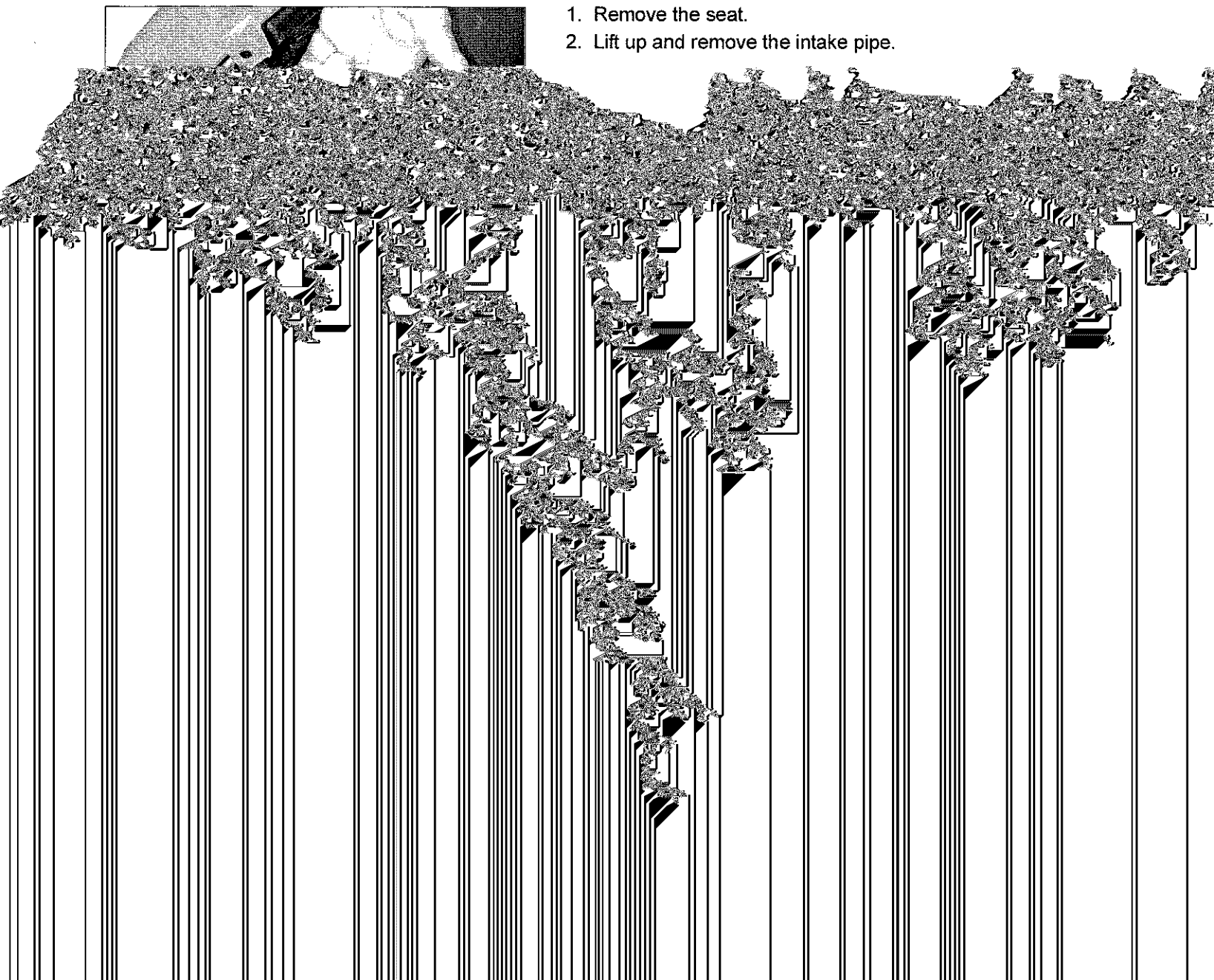

Installation

Note:

The foam seal surface of the air filter must not be damaged. It must overlap the edge of the intake muffler exactly.
The opening of the intake pipe may not be blocked by parts or cables. This can result in reduced performance!

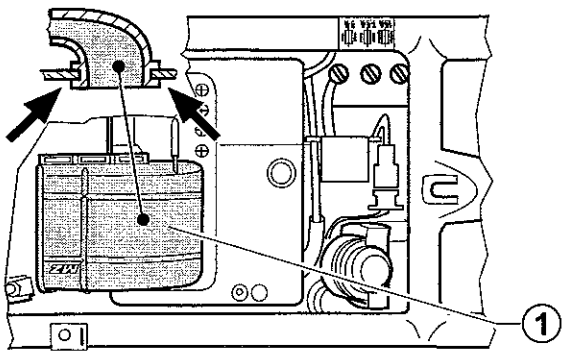

1. Insert the air filter into the locking indentation, press the foam forward toward the carburettor.
2. Insert the body-bound rivet and tension it.
3. Connect the intake pipe (1).
   The intake pipe must be seated correctly with its sealing lips on the intake muffler (see arrow left in the figure).
4. Install the seat.

3.12 Shock Absorber

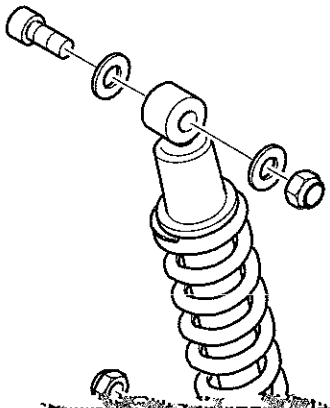

Production models of the motorcycle are delivered with a spring length of **184,5 ± 2 mm**. This is the proper setting for a load of approx. 75 kg.
If a pillion rider is along, the spring preload must be increased to a length of 177 mm.
The damping of the shock absorber cannot be adjusted.

Guidelines:

Single rider, 75 kg	spring length **184,5 ± 2 mm**
Two riders:	spring length **177 ± 2 mm**

Intermediate settings are also possible.
Adjusting the spring preload to a spring length of 190 mm can

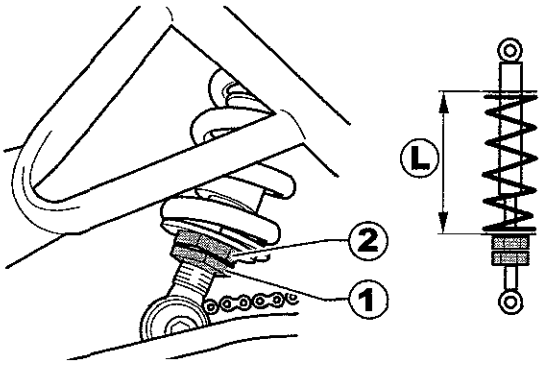

Adjustment

1. Loosen the locking nut (1).
2. Adjust the spring preload by changing the spring length (L):
   - Tighten setting nut (2) = greater spring preload,
   - Loosen setting nut (2) = less spring preload
3. Hold the adjusting nut in position and tighten the locking nut.
4. Adjust the headlight (see 3.5.4 "Adjusting the Headlight").

Removal

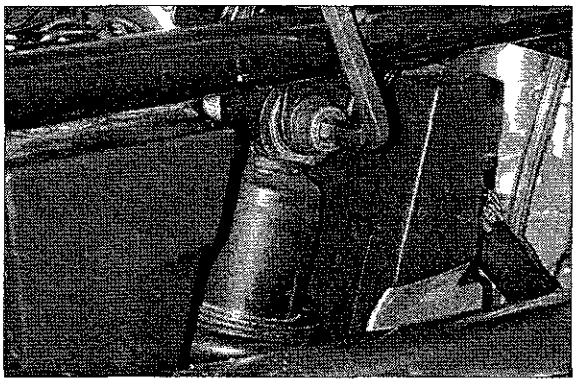

1. Remove the seat and side panel.
2. Unscrew the upper M10 pan-head screw, holding the nut still.
3. Pull off the screw.

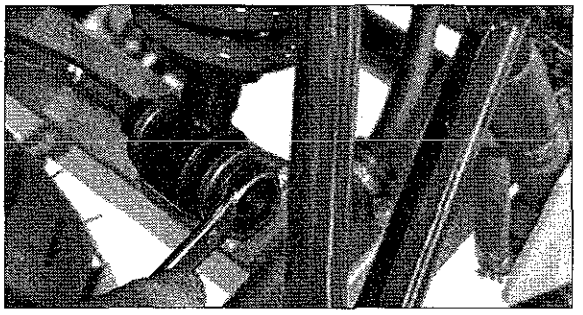

4. Unscrew the lower M10 pan-head screw, holding the nut still.
5. Pull out the pan-head screw.

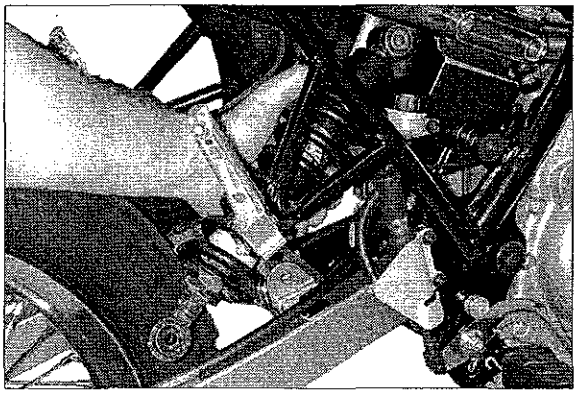

6. Pull out the shock absorber down and to the rear.

Installation

Install in reverse order.
The lower screw must be inserted from the left side of the vehicle.

3.13 Foot Rests

3.13.1 Rear Foot Rest

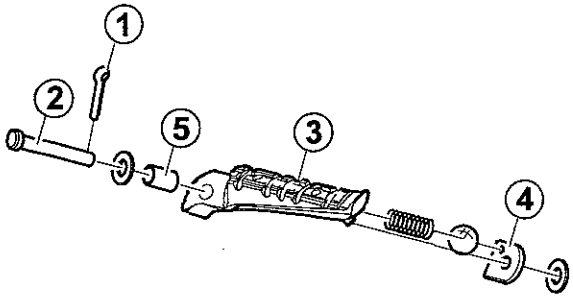

1. Bend up the splint (1), remove the splint and washer.
2. Pull out clevis pin (2).
3. Pull the foot rest (3) with ball spring and special washer (4) out of the mount.
4. Remove the spring, ball and sleeve (5).
5. Inspect all parts and replace, if necessary.

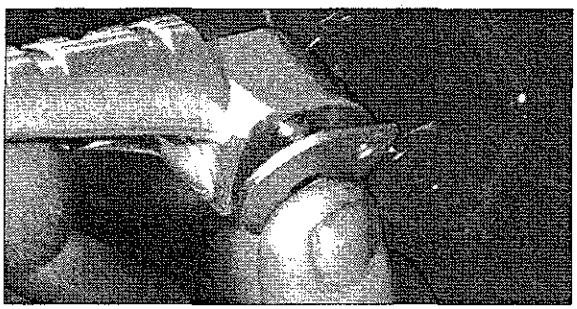

Installation

1. Insert the sleeve, spring and ball into the foot rest with grease.
2. Position the special washer such that the ball can snap into the hole of the special washer when the foot rest is folded up.
3. Slide the clevis pin through from above.
4. Position the washer and secure with a new splint.

3.13.2 Front Foot Rest

Removal

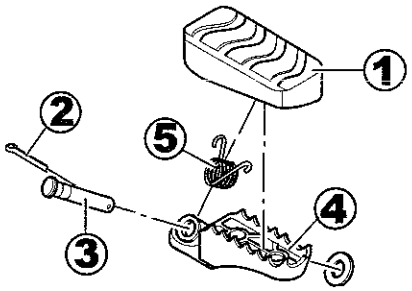

1. Pull off the foot rest rubber piece (1).
2. Bend up the splint (2), remove the splint and washer.
3. Pull out the pins (3).
4. Pull the foot rest (4) and spring (5) out of the mount.

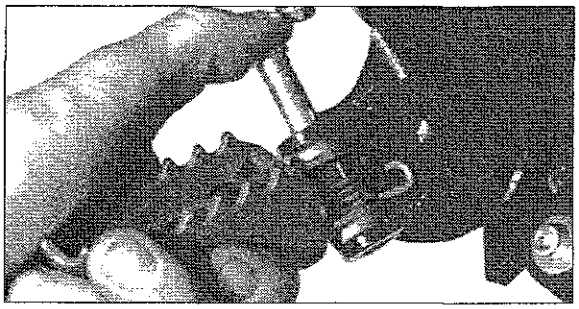

Installation

1. Slide the foot rest with spring onto the mount.
2. Lightly grease the pins and slide them through.
3. Position the washer.
4. Insert a new splint and bend it over.

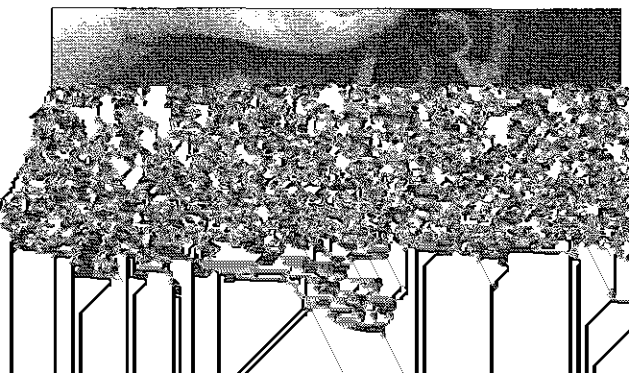

5. Place the foot rest rubber piece on the foot rest, pull the rubber nipple through with a pliers.

3.14 Side Stand

3.14.1 Side Stand Switch

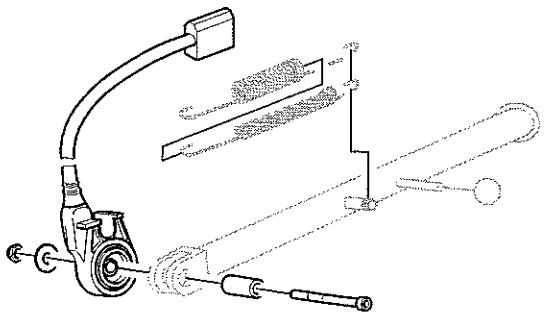

The side stand switch prevents starting and riding with the side stand folded out and the gear engaged at the same time reducing the risk of accidents.
It interrupts the ignition line when the stand is folded down and the motorcycle is put in gear.

Removal

Hazard!

Accident risk!
A defective switch eliminates the safety function!
To loosen the connection, only turn the mounting screw.
If the nut is also turned, the switch may be destroyed.

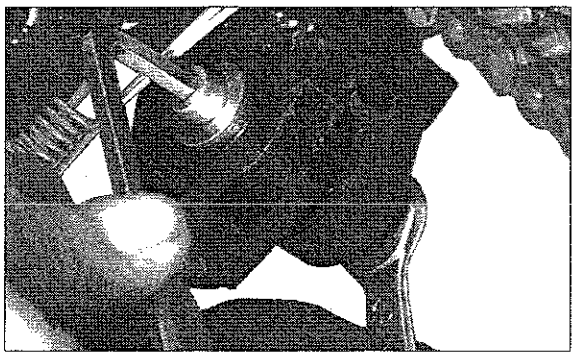

1. Disconnect cable from the cable harness.
2. Hold the self-tightening nut on the switch and turn only the screw.
3. Remove the nut, washer and side stand switch.

Installation

1. Adjust the side stand switch with the nose of the switching part in the hole of the side stand fork.
2. Slide the side stand switch onto the mounting pins on the pivot bracket.
3. Position the washer and self-tightening nut, hold it still.
4. First tighten the screw with a torque of 5 Nm, then turn 90° back.
5. Run the cable upward between the intake muffler and the frame and connect it to the cable harness.
6. Function test of the side stand switch.

Tightening torque:

M6 screw:	5 Nm, then turn 90° back

3.14.2 Side Stand

Attention!

Risk of injury!
The tension springs may jump away during removal/ installation!
Wear protective goggles!

Removal

1. Remove the side stand switch.
2. Pull off the screw.
3. Slide through the sleeve with thorn.
4. Pull the side stand downward off the pivot bracket.

3.15 Intake Muffler

Removal

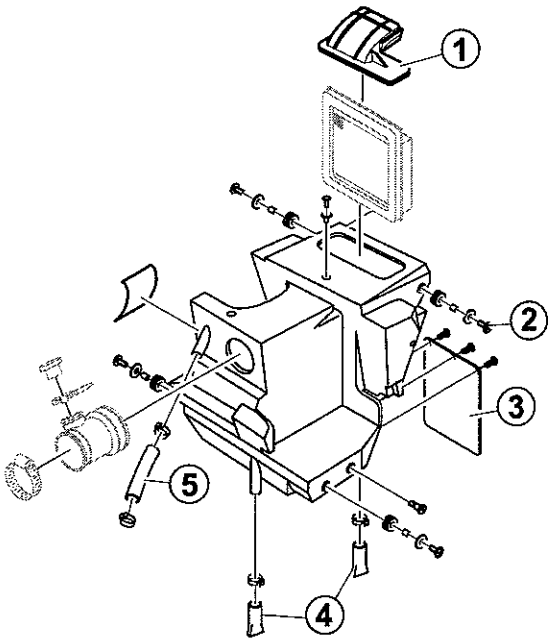

1. Secure the vehicle against tipping.
2. Remove the seat, spoiler, fuel tank and the side panels.
3. Remove the battery, fuse box and relay.
4. Disconnect the cable from the parking light switch.
5. Remove the exhaust system.
6. Remove the chain guard and rear wheel.
7. Remove the intake pipe (1), shock absorber protector (3), ventilation hose (5) and condensate collector (4).
8. Removing the air intake fitting of the carburetor.
9. Empty the condensate collector (4) and clean, if necessary.
10. Remove the shock absorber.
11. Remove the reserve brake fluid tank, remove the main brake cylinder, run the hose outward and attach it to the frame.

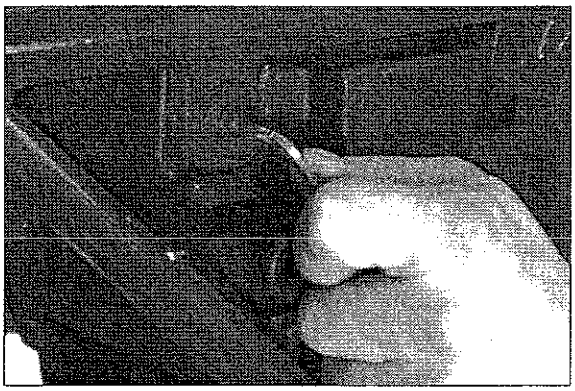

12. Unscrew the four M6 screws (2) and remove the washers.

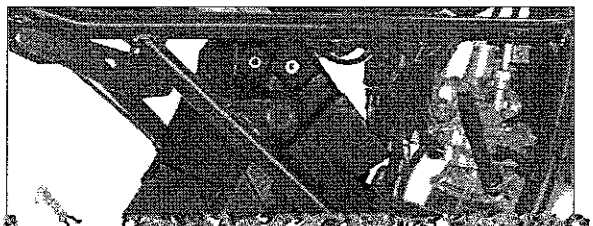

13. Rotate the intake muffler downward around the pivot of the upper mount and pull it out toward the rear.

3.16 Muffler

Hazard!

Risk of burns!
The exhaust system becomes very hot while the engine is running. Let the exhaust system cool before working on it.

Removal

1. Loosen the locking screw on the manifold-muffler connection (exhaust clamp).

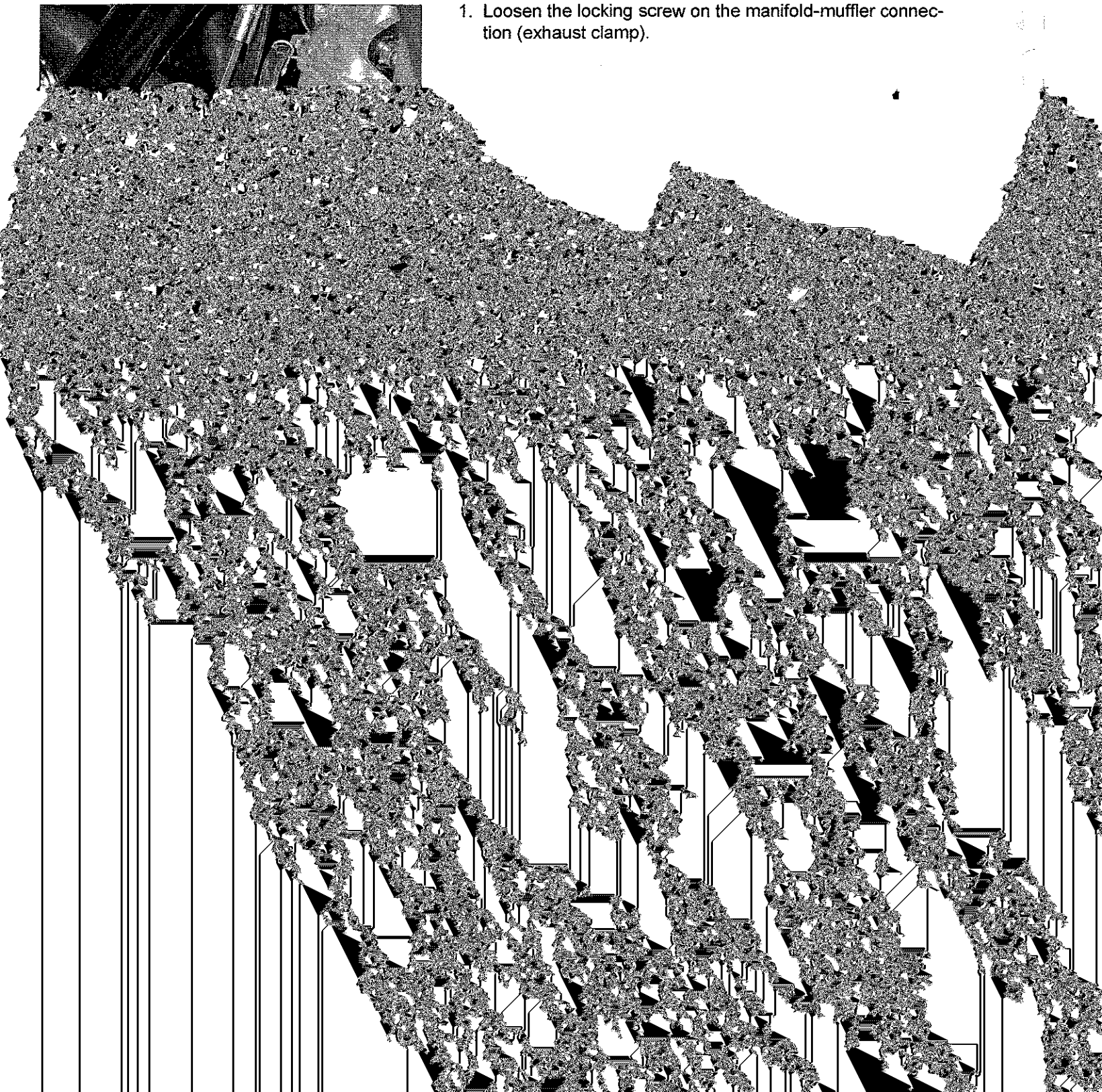

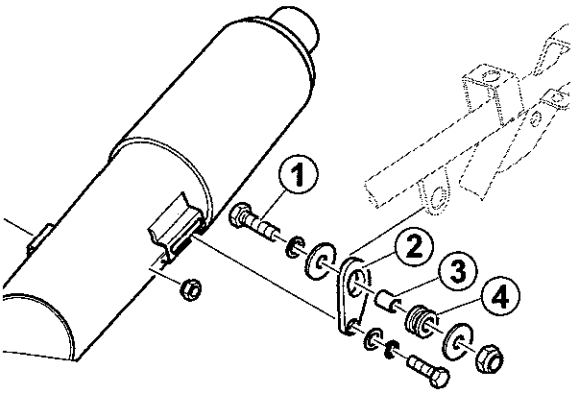

3.16.1 Exhaust Mount Plate

Removal

1. Remove the muffler (see 3.16 "Muffler").
2. Remove the screw (1) and washers.
3. Remove the mount plate (2).

Installation

1. Inspect the spacer sleeve (3) and cable sleeve (4), replace if necessary.
2. Install all parts loosely.
3. Fit the mount plate (2) to the muffler.
4. Tighten the screw (1).

Tightening torque:

Hexagon head screw:	30^{+5} Nm

3.16.2 Manifold

Removal

1. Remove the muffler (see 3.16 "Muffler").
2. Unscrew the M6 nuts on the manifold flange.
3. Remove the manifold.
4. Remove the exhaust flange from the manifold.
5. Remove the manifold seal from the cylinder head.

3.17 Cooling System

3.17.1 Coolant

Attention!

Insufficient coolant can damage the engine!
If coolant is lost, the cause must be eliminated.

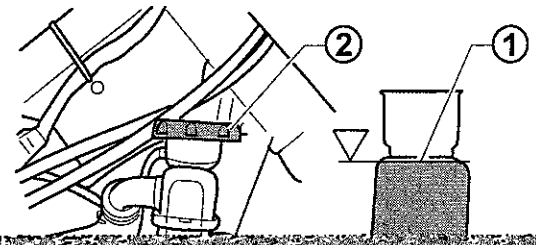

The coolant system is filled with a mixture of high quality brand-name coolant for aluminium engines with anti-freeze characteristics and distilled water.
The coolant level (1) should be just under the lower seal surface of the radiator cap when the engine is cold.
The recommended mixture ratio of 1:1 (water: coolant guarantees anti-freeze protection down to 20°C (-4°F).

3.17.2 Radiator Cap

The radiator cap functions as both a seal and a valve.

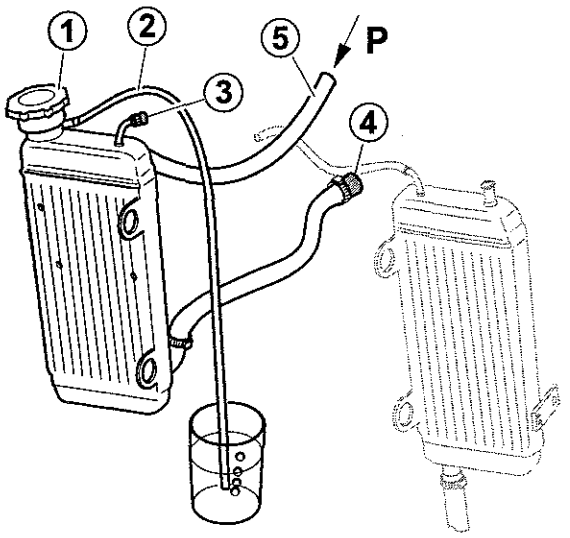

Inspection

1. Inspect the tight seat of the radiator cap (1).
2. Disconnect the upper (thin) radiator connection hose of the right radiator and close the connection air-tight with plug (3). Secure the plug.
3. Disconnect the lower (thick) radiator connection hose of the left radiator and close the connection air-tight with plug (4) and a clamp.
4. Place the appropriate hose (2) over the overflow outlet and hold the other end in a container filled with water. Observe air bubbles upon opening of the valve.
5. Apply a pressure of more than approx. 1.2 bar to the second radiator connection (5) and increase the pressure slowly.

At 1.4 bar, the valve of the radiator cap must open.
Air escapes from the radiator cap and flows through the hose into the container. Air bubbles can be seen in the container.
If an opening pressure of over 1.4 bar is required, the radiator cap must be replaced.

3.17.3 Radiator Hoses

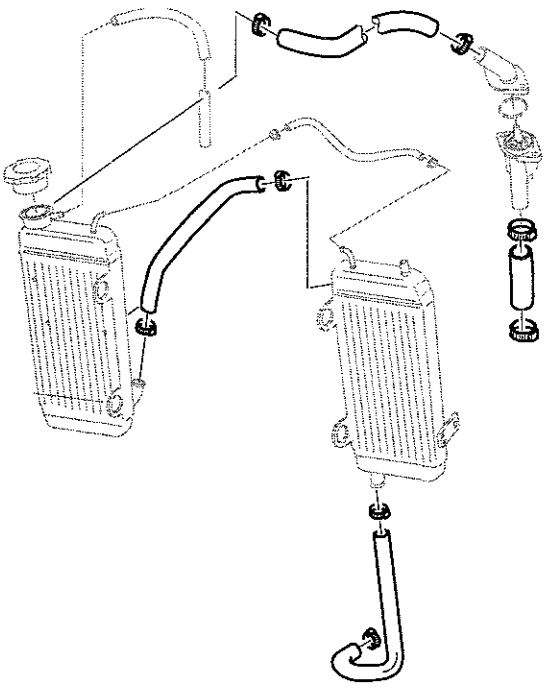

Inspect the radiator hoses for damage (e.g. cracks) and examine their condition (e.g. porosity).
Replace radiator hoses, if necessary.

Removal

1. Drain the coolant.
2. Open the hose clamps.
3. Pull off the radiator hoses and remove the hose clamps.

Installation

1. Inspect the hose clamps.
   Replace defective hose clamps.
2. Slide the hose clamps onto the new radiator hoses.
3. Push the new radiator hoses onto the connections.
4. Screw in the hose clamps.
5. Fill coolant up to the lower edge of the fill marks.

3.17.4 Radiator

Do not clean the two-part radiator with a high pressure cleaner or an intense stream of water. The radiator plates may deform and the cooling performance will be reduced.
Repair of a defective radiator is not possible.
Radiators do not need to be replaced in pairs.

Removal

Hazard!

Risk of scalding!
Coolant becomes very hot while the engine is running. Do not open the radiator cap while the engine is hot! Let the radiator cool before starting work.

Risk of injury!
The coolant system works with overpressure. Wear protective gloves. Open the radiator cap carefully to release the pressure.

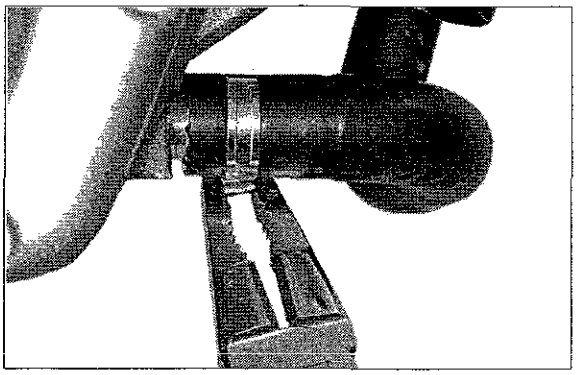

1. Let the engine cool.
2. Remove the tank.
3. Disconnect the fan cable from the power supply.
4. Open the radiator cap carefully and let the pressure escape.
5. Position a suitable container under the radiator to be emptied and drain the radiator one after the other.
6. Loosen the lower clamp and pull off the radiator hose. Drain the coolant into a suitable container.
7. Loosen the clamps on the supply and drainage hoses and pull the hoses away from the radiator.
8. Remove the ventilation hose.

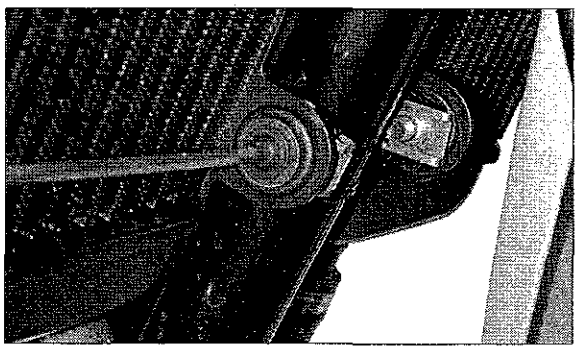

9. Remove the two screws of the respective radiator mount. Hold the appropriate radiator in place with one hand when removing the second screw.
10. Remove the radiator.

Installation

Install in reverse order.
Connecting hoses must be placed kink-free around the frame.

3.17.5 Thermostat

Removal

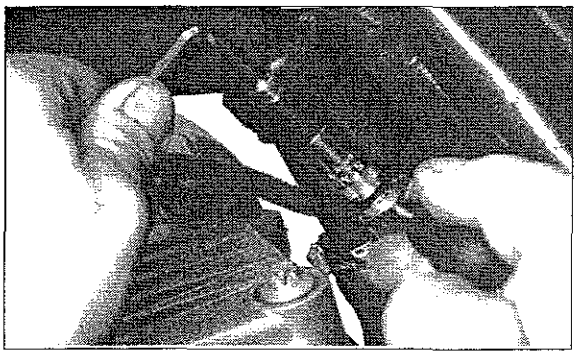

1. Drain the coolant (see 3.17 "Cooling System").
2. Remove the seat and fuel tank (see 3.4 "Fuel Tank").
3. Open both hose clamps on the thermostat.
4. Pull the thermostat away from the radiator hoses.

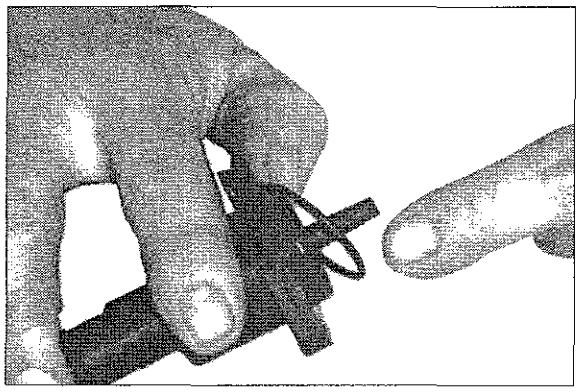

5. Remove the two screws and separate the housing.
   Be careful with the O-ring!

The thermostat cannot be separated from the thermostat housing, only the top part can be removed.

Inspection

If the opening temperature range does not match the ones specified the thermostat must be replaced.

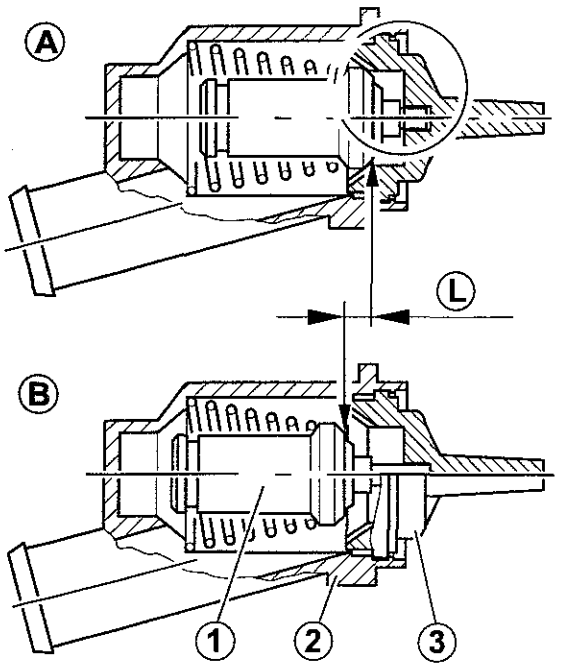

(A) Position of the thermostat with coolant water temperatures < 71 °C => closed.
(B) Position of the thermostat (1) with cold water temperatures ≥ 81 °C => open.

The difference between (A) and (B) must be (L) >5 mm.

(1) Thermostat
(2) Housing
(3) End cap

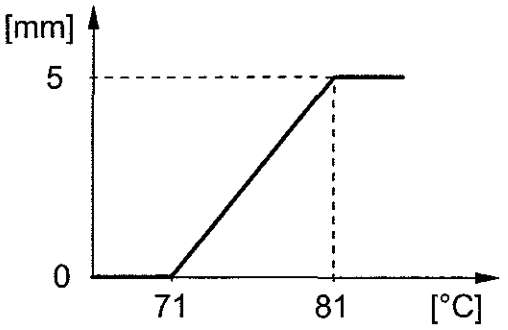

As shown by the line, the thermostat begins to open at 71 °C. At 81 °C the maximum opening of 5 mm is reached.

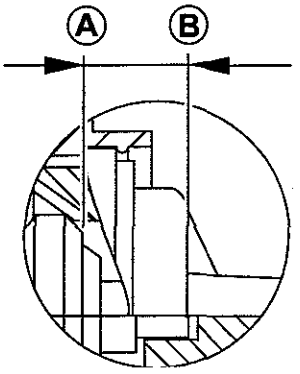

1. When the thermostat is cold, measure from the front edge of the cap (B) in the thermostat to the edge (A) (e.g. depth gauge).
2. Record the value.
3. Place the thermostat in a container filled with water.
4. Heat the water slowly with constant stirring.
5. Check the temperature with an exact thermometer.

Attention!

Risk of scalding!
Only use safe tools.

6. Upon reaching a temperature of 81 °C, immediately remove the thermostat from the water with an appropriate tool, e.g. pliers, and repeat the above measurement.
7. The front edge of the thermostat must have moved 5 mm toward the inside in comparison with the recorded value.
8. If the difference of 5 mm is not reached at 81 °C, the thermostat must be replaced.

Installation

Attention!

Risk of engine damage due to overheating!
The thermostat has bypass holes to ensure a minimum of water flow.
These bypass holes must always be open.

1. Treat the O-ring with silicon spray and slide it onto the thermostat.
2. Position the top part and mount it with both screws.

Note:

The O-ring must not be crushed/damaged, otherwise the thermostat has no seal.

3. Connect the radiator hoses to the thermostat.
4. Mount and close the hose clamps.
5. Fill coolant up to the lower edge of the fill marks (approx. 0.95 litre).

3.18 Telescopic Fork

The telescopic fork has hydraulic damping.
It softens hard jolts from the road surface, preventing the shocks from bottoming. It reduces the after-vibrations of the shocks. This function contributes significantly to the condition of the road, thereby improving safety.

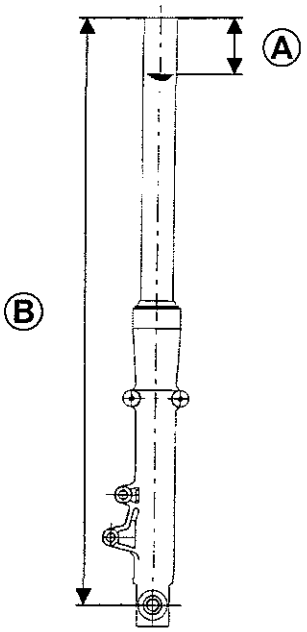

A = damping fluid level = 140 ± 2,5 mm
B = length without spring, the upright pipe completely inserted

Volume per fork spar:	445 cm^3
Recommendation:	Gabelöl SAE 7,5 - 10 W

Note:

3.18.1 Fork Spars

Removal

3.18.2 Dismantling the Telescopic Fork

Environment!

Environmental hazard!
Fork oil may flow out!
Hold the open fork spar vertically to prevent escape of the fork oil.
Immediately collect escaped oil and dispose of it properly.

1. Loosen the locking screw (1) of the top fork bridge.
2. Loosen the sealing cap (2) (do not screw it off).
3. Remove the telescopic fork (see 3.18 "Telescopic Fork").
4. Remove the screw plug, remove the spacer sleeve, pull the

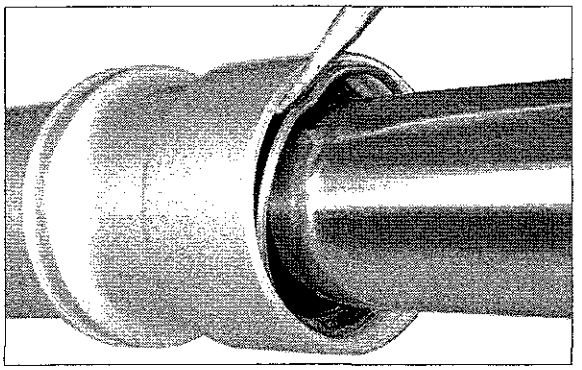

9. Remove the retaining ring turning the screw driver blade.
10. Pull the upright pipe and pressure spring out off the sliding pipe.
    Hold the upright pipe that it does not fall down.

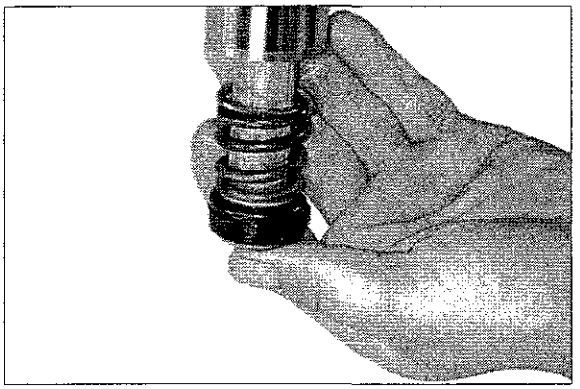

11. Remove the support pipe with a stop spring.

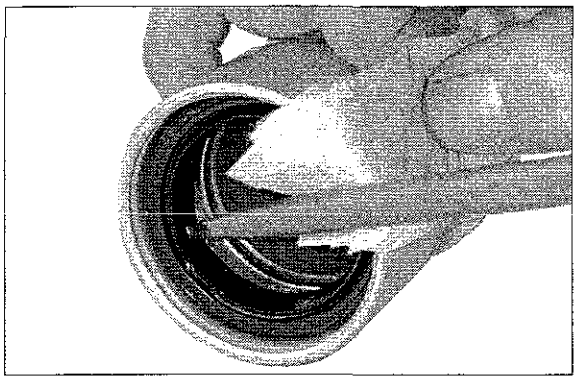

12. Lift the seal ring from the seat on the sliding pipe with turning motions of the screw driver blade.
    Protect the sliding pipe against damage.

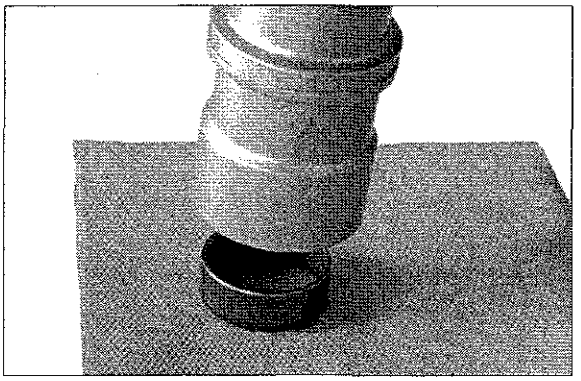

13. Ram the slide tube cautiously against a support (wood) until the piston ring falls out.
14. Clean all parts carefully.

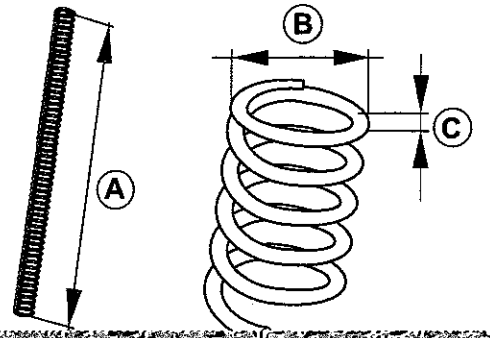

Inspection

Perform the following inspections:

- Curvature of the upright pipe (10),
  Bent upright pipes cannot be straightened.
- Wear/damage on the sliding bush,
- piston ring (13),
  Replace the sliding surface piston ring in the event of excessive wear and/or damage.
- Inspect the spring length:
  - (A) spring length, unstressed: 555 ±5 mm.
  - (B) outer diameter: top 32 +0,2 / -0,4 mm,
    bottom 26 +0,2 / -0,4 mm

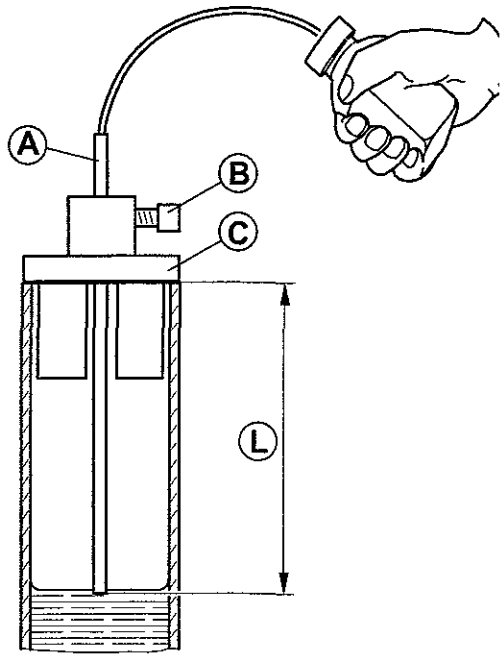

The oil suction devices available in accessory shops are recommended for precise filling of the two fork spars.
The image on the right shows one of the models.

14. Loosen the locking screw (B).
15. Slide the pipe (A) until the distance from the end of the pipe to the lower edge of the cover (C) is (L)=140±2,5 mm) Lock the pipe.
16. Hang the suction device with the cover into the upright pipe.
17. Suck up excess fork oil (nominal filling volume 445 ml).
18. Remove the suction device.
19. Pull out the upright pipe (10) up to the stop, insert the compression spring (19) and spacer sleeve (18) into the upright pipe.
20. Insert the sealing cap (16) with the seal ring (17) into the upright pipe with light pressure and screw together. Torques 20 Nm
21. Install the fork spar.

3.18.3 Fork Bridges

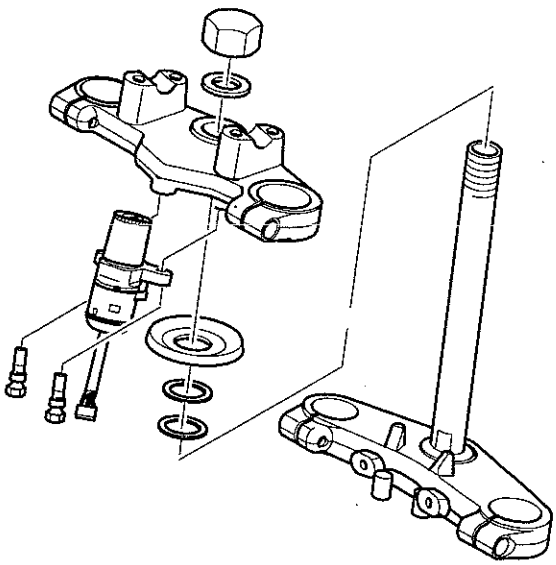

Removal

1. Remove the seat, the fuel tank and the front wheel mud guard.
2. Completely remove the handlebar, disconnect the right/left plug connector switch and ignition lock (careful of barbs) under the fuel tank container.
3. Place the handlebar onto the rear part of the frame. Do not kink brake hoses and cables!

Note:

To prevent damage to the M24x1 nut, a piece of foil may be wrapped around the tool (socket/ring spanner).

4. Loosen the locking screws on right/left.
5. Remove the M24x1 nut and washer.

3.18.4 Steering Bearing

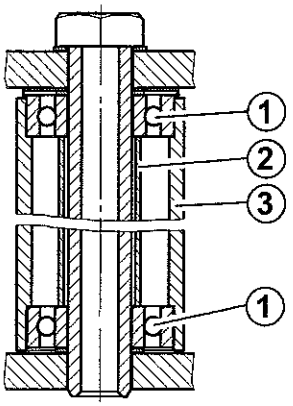

The steering bearing consists of two greased ball bearings (1) and a spacer sleeve (2).
The spacer sleeve (2) guarantees a specified distance between the bearings in the steering head (3).
Exact installation is made possible by a pressing tool.

Removal

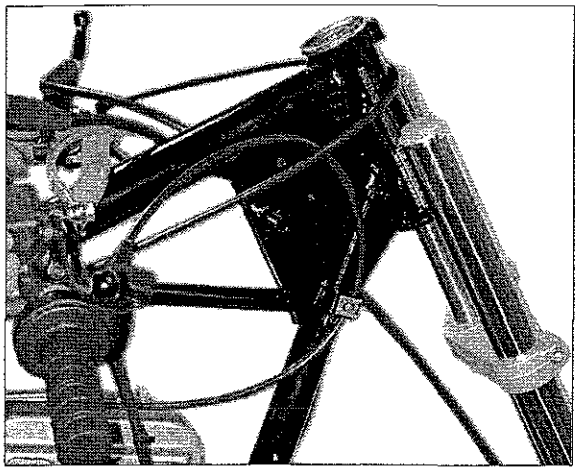

1. Remove the fuel tank, seat, front wheel.
2. Disconnect the start, clutch and throttle bowden cables.
3. Disconnect the electrical system, six plug connectors (right/ left switch, ignition switch, headlight, instruments.
4. Remove the handlebar.
5. Remove the upper fork bridge.
6. Completely pull the telescopic fork down and out.

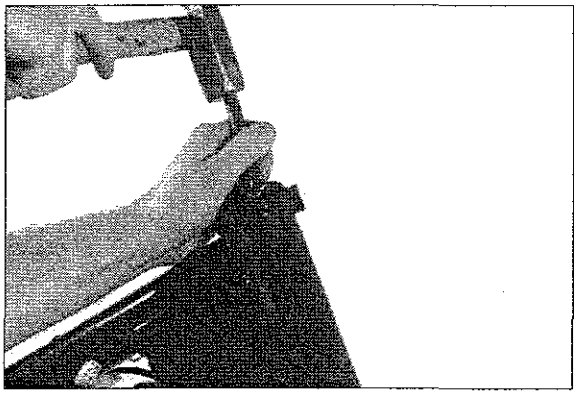

7. Remove the cover and fitting washer from the top bearing.
8. Carefully pound out the lower bearing from above using a hammer and spike.

Attention!

Damage to bearing!
Do not jam the bearing when pounding it out!
Alternate pounding on opposite sides.

9. Remove the bearing and spacer sleeve.
10. Pound out the top bearing from below.

Installation

Attention!

Do not pound the bearing in with a hammer!
Always use a pressing tool.

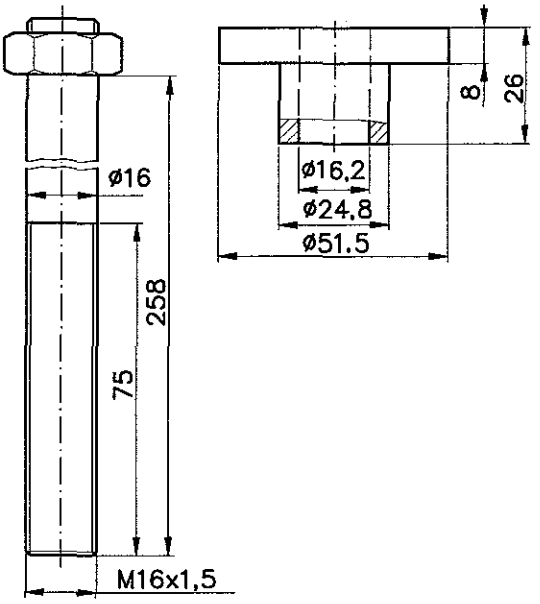

Dimensions for pressing tool
Pressure piece: 2x
Nut: M16x1,5, 2x
Pressure piece material:Steel C15
Threading pin material:Steel 50CrV4

Attention!

Only use original spacer sleeves!
Do not flatten or bend the spacer sleeve while pressing in the bearing!

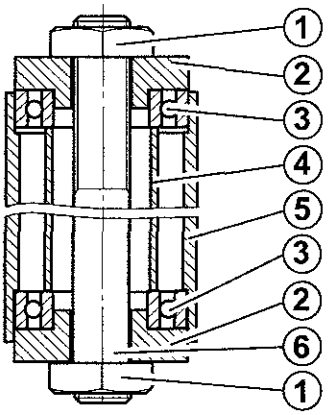

1. Insert the new, greased ball bearings (3) and spacer sleeves (4) into the steering head (5).
2. Press the ball bearings and spacer sleeve into the steering head using the pressing tool described above.

(1) Hexagon nut
(2) Pressure piece
(6) Threading pin

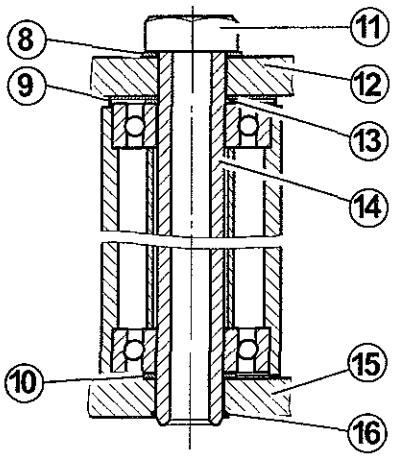

3. Place the fitting washer (10) on the lower fork bridge (15), slide the telescopic fork with steering pipe (14) into the pre-installed steering bearing from below.
4. Lay the fitting washer (13) onto the top bearing.
5. Position the cover (9).
6. Mount the top fork bridge (12), position the washer (8) and tighten with the M24x1 nut (11).
7. Mount the handlebar.
8. Connect the cable to the cable harness and lay properly.
9. Connect the three bowden cables.
   Make certain they do not kink.
10. Install the front wheel.
11. Install the fuel tank and seat.
12. Perform a function test on the front brake.

Tightening torque:

Top locking screws:	25^{+5} Nm
Bottom locking screws:	25^{+5} Nm

3.19 Swing Fork

The riding performance of the motorcycle depends heavily on the proper functioning of the swing fork.
The swing bearings consist of rubber brushes.
In case of play detected the rubber parts must replaced.

Removal

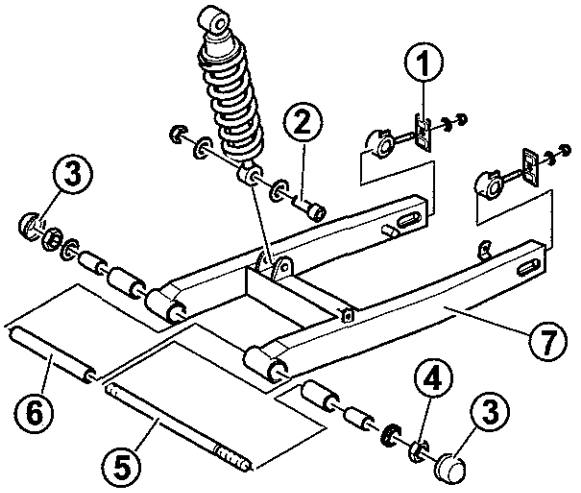

1. Remove the pinion cover and take off the chain.
2. Remove the brake hose from the holders.
3. Remove the rear wheel, remove the chain adjuster (1) on both sides.
4. Unscrew the lower shock absorber mount (2)
5. Remove the sealing cap (3), loosen the M16x1.5 hexagon nut (4).
6. Pull out the swing bearing pin (5) and spacer sleeve (6).
7. Pull the swing fork (7) out of the frame.

Installation

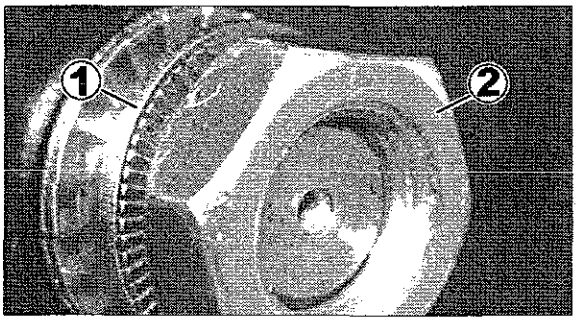

1. Insert the greased swing bearing pin with washer approx. 1 cm into the frame.
2. Insert the swing fork into the frame and slide the swing bearing pins up to the stop.
3. Position the locking washer Nord-Lock 16x25.4 (1) on the left and screw the nut (2) on a few turns.
   Do not tighten it yet.

Note:

Possible damage to the swing bearing!
First screw on the shock absorber with the swingarm, then tighten the swing bearing bolts.

4. Screw the shock absorber to the swing fork, press the locking caps onto the nuts of the swing bearing pin.
5. Fix the brake hose with adhesive pads on the swing fork.
6. Position wheel, insert axle.
7. Install the chain (see above), adjust the chain slack.
8. Screw the rear wheel on tight.
9. Inspect the wheel track, adjust if necessary.
10. Mount the pinion cover.
11. Activate the foot brake lever until braking action occurs.

Tightening torque:

Axle nuts:	100^{+10} Nm
Shock absorber:	40^{+5} Nm
Swing bearing pin:	100^{+10} Nm

4 Brakes and Wheels

4.1 Brakes Front

Hazard!

Ineffectual or faulty brake systems put lives at risk. Improper work can impair the functioning of the brake system, thereby reducing the safety of the vehicle in traffic.
Perform all work attentively and responsibly, based on this repair manual.

The front brake is designed as a hydraulic disc brake with a two-piston floating caliper.

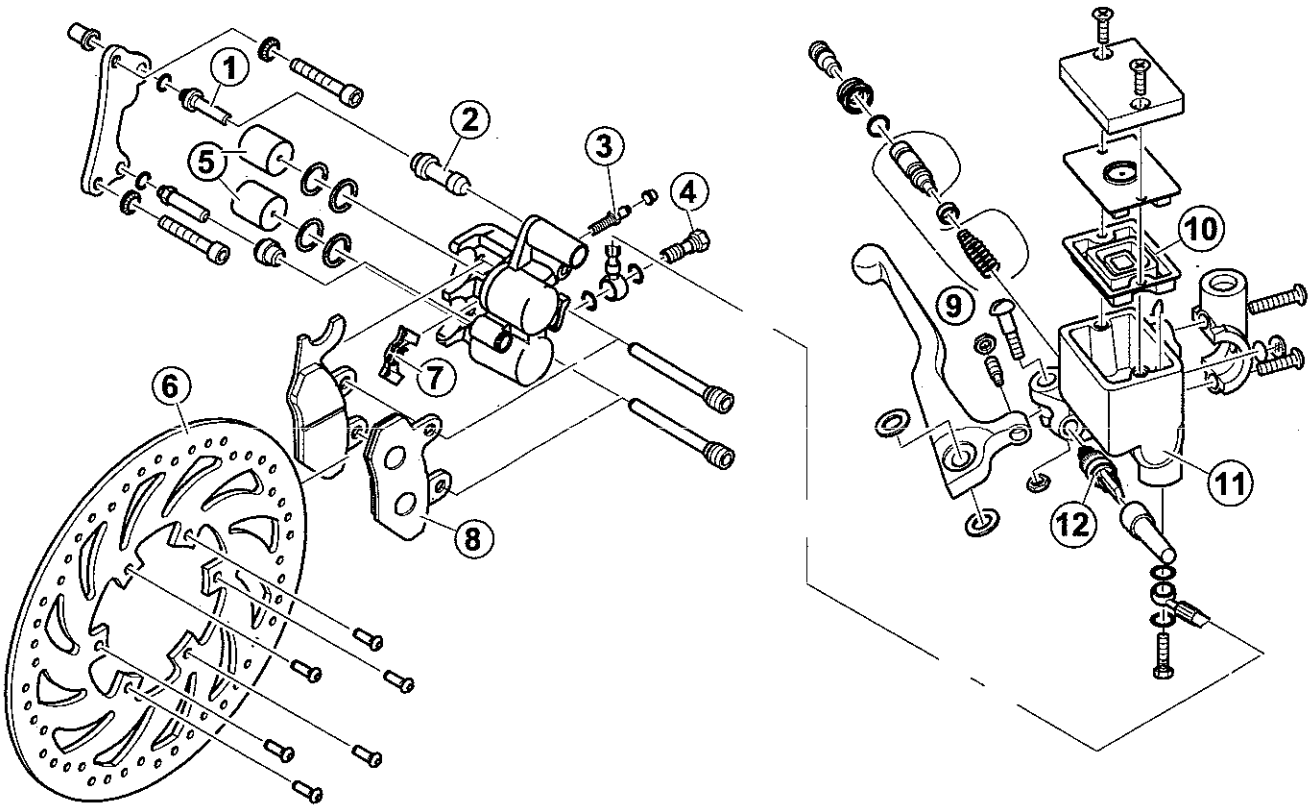

(1) Sliding pin
(2) Seal collar
(3) Air bleeding screw
(4) Banjo bolt M4x10
(5) Piston
(6) Brake disc Ø 280 mm
(7) Tension bracket
(8) Brake pad
(9) Piston with compression spring
(10) Hermetic bellows
(11) Main brake cylinder
(12) Front brake light switch

4.1.1 Front Wheel Brake Adjustment

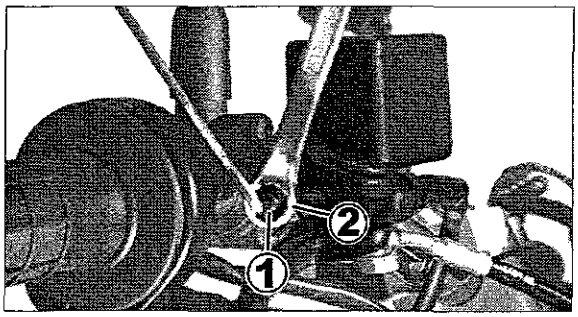

The adjusting screw (1) (hexagon socket 3 mm) is used to adjust the pressure point of the front wheel brake:

1. Loosen the locknut (2) for the adjusting screw (1).

Attention!

The equalisation hole (3) is covered by the seal ring (4), if the adjusting screw (1) is screwed too far in. For this reason the brakes may be blocked, as the brake piston in the brake caliper cannot move far enough back.

4.1.2 Brake Fluid

Attention!

If insufficient brake fluid is present, air can enter the

Replacing

The brake fluid must be changed at least every two years. Old brake fluid tends to form bubbles under high stress (long descents/frequent braking), resulting in a significant reduction in braking performance and riding safety.

Attention!

Brake fluid is aggressive and poisonous.

Avoid contact with skin.
Do not pour onto paint, plastic or rubber surfaces.
Immediately wipe up spilled brake fluid.
Always cover sensitive components with a rag while working on the brake system.

Only use new DOT4 brake fluid.
Do not mix different kinds.

Brake fluid absorbs water from the air.
For this reason, only store brake fluid in closed

4.1.3 Bleeding the Brake System

Use a bleeding device to bleed the brake system - follow the manufacturer's instructions:

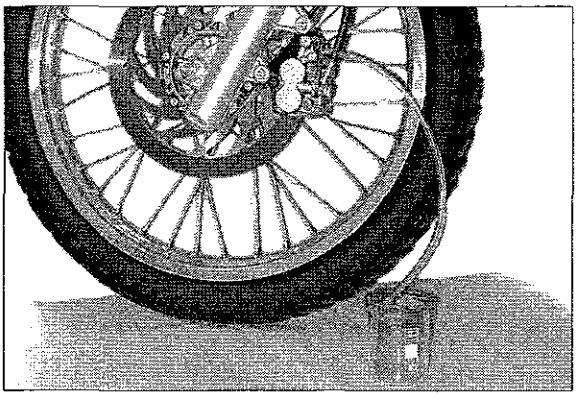

1. Position the vehicle such that the main brake cylinder sits horizontally.
2. Unscrew the main brake cylinder, add new brake fluid up to the top edge of the inspection window.
3. Position the hermetic bellows, bolster plate and cap.
4. Remove the dust cap.
5. Place a ring spanner and transparent hose onto the air bleeding screw, place the other end of the hose in a suitable container filled with brake fluid.
6. Open the air bleeding screw, work the brake lever once and stop.
7. Close the air bleeding screw.
8. Let go of the brake lever, pump several times (10x), hold the lever down.
9. Open the air bleeding screw.
   Old brake fluid and air escape.
10. Close the air bleeding screw.
11. Repeat the process until the escaping brake fluid has no bubbles.
12. Remove the ring spanner and hose, return the dust cap.
13. Add new brake fluid up to the marking on the inspection window.
14. Perform function test.

Note:
Always make certain that sufficient brake fluid is present in the main brake cylinder.
Add brake fluid, if necessary.

Environment:

Properly dispose of used brake fluid.

4.1.4 Main Brake Cylinder

Removal

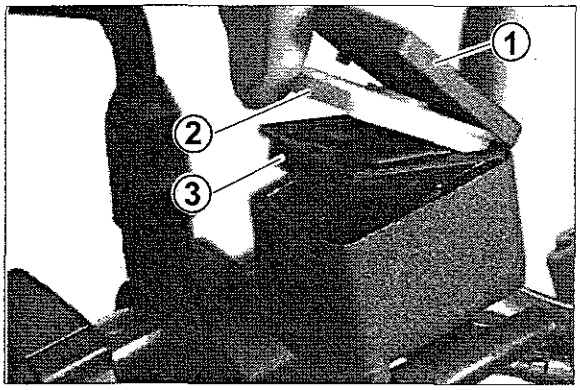

1. Position the vehicle such that the main brake cylinder sits horizontally.
2. Unscrew the two screws on the cap.
3. Remove the cap(1), bolster plate (2) and hermetic bellows (3).

4. Suck the brake fluid out of the storage tank (e.g. with a syringe).

4.1.5 Inspection Window

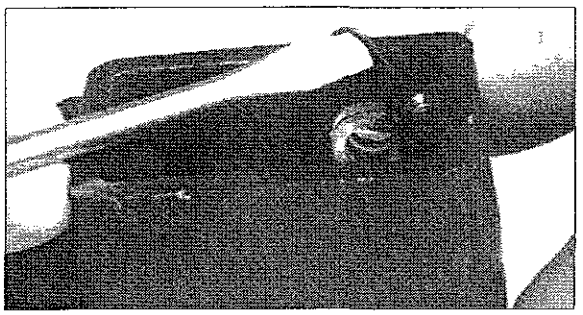

Removal

1. Position the vehicle such that the main brake cylinder sits horizontally.
2. Open the main brake cylinder cap.
3. Suck out the brake fluid until the level is under the lower edge of the inspection window (e.g. with a suitable syringe).
4. Lift out the clasp with a screw driver.
5. Press out the inspection window along with the seal ring.
6. Replace the seal ring and/or glass.

Installation

Install in reverse order.
The MIN mark must be parallel to the cap seal surface.
Add brake fluid, bleed (see 4.1.3 "Bleeding the Brake System").
Perform function test.

4.1.6 Replacing the Seal Set

Rubber components must be replaced by new parts in case of damage or cracking or, in general, every 4 years.

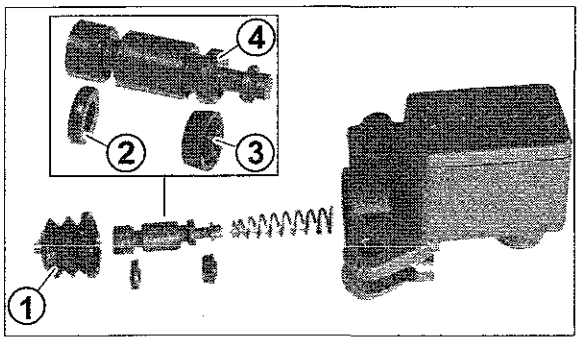

1. Drain the main brake cylinder.
2. Remove the seal collar (1).
3. Remove the piston (4).
4. Replace the seal rings (2) and (3).
5. Clean all parts with brake cleaner.
6. Moisten new parts with brake fluid and insert them into the main brake cylinder.
   Do not use grease!

Hazard!

Accident risk!
The seal lip of the seal collar (1) must face inward when installed. Otherwise no braking pressure can be established and the brake does not function.

7. Insert spring.
8. Press in the piston.
9. Slide on the seal collar.
10. Add brake fluid, bleed
    (see 4.1.3 "Bleeding the Brake System").
11. Perform function test.

4.1.7 Entire Brake Caliper

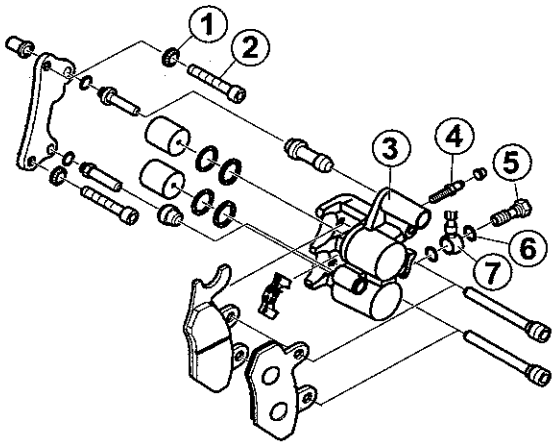

The front and rear brake calipers have an identical design. The front brake caliper has a mirror-inverted design as compared to the rear brake caliper.

(1) Locking washer 8x13.5 (Nordlock)
(2) Screw M8x30
(3) Brake caliper
(4) Air bleeding screw
(5) Banjo bolt M10 x 1.25
(6) Seal ring
(7) Brake hose

Removal

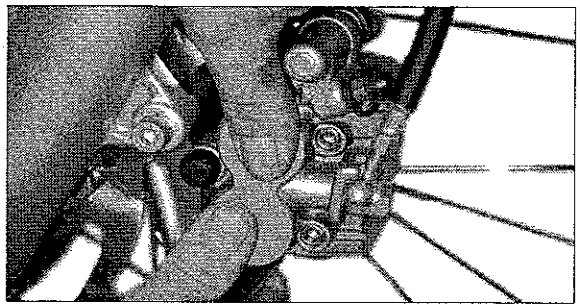

1. Press the brake caliper (3) toward the middle of the vehicle against the brake disc, pressing back the pistons of the brake caliper.

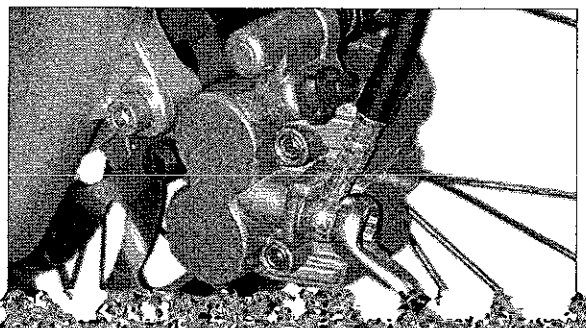

2. Unscrew the banjo bolt (5).
3. Remove the two seal rings (6).
4. Place the banjo bolt on cleaning paper.
5. Wrap cleaning paper around the brake hose.
6. Elevate the opening of the brake hose, fasten it to the frame, if necessary.
   This prevents the brake hose from draining. It simplifies the bleeding process.

4.1.8 Brake Pads

Inspection

Attention!

Reduced braking performance!

The thickness of the brake pads must never be less than (B)= 2.0 mm.
If the thickness is insufficient, the brake discs may be damaged.

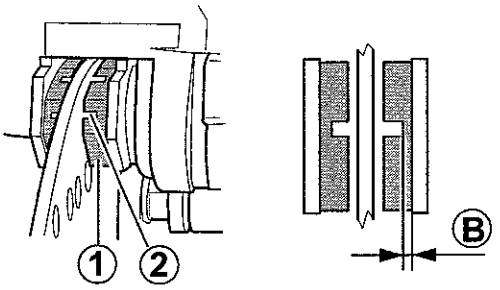

The brake pads (1) have wear marks (2).
If these wear marks are no longer visible, the brake pads must be replaced.
Always replace the brake pads in pairs.

Removal

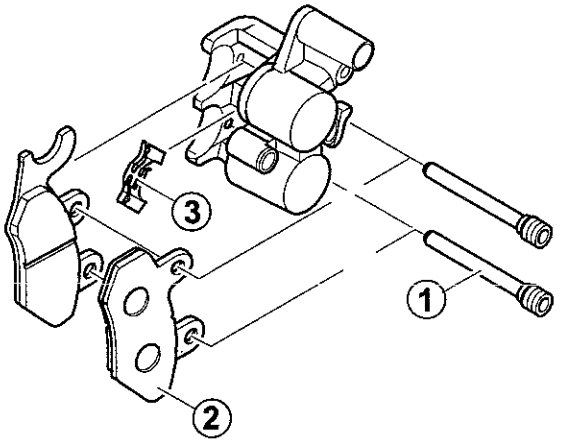

1. Unscrew the mounting pins (1).
2. Remove both brake pads (2).
3. Pull out the tension bracket (3) .

Installation

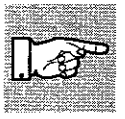

Note:
The brake pad lining seats can be treated with copper paste or brake protector. This prevents the brake pads from squeaking.
The tension bracket must be positioned under the mount pins.

1. Insert the tension bracket (3).
   The wide sliding side must face toward the pistons.
2. Insert new brake pads (2).
3. Slide in the mounting pins (1) and screw them tight.

4.1.9 Brake Caliper/Components

Removal

1. Remove the brake caliper
   (see 4.1.7 "Entire Brake Caliper").
2. Clean the brake fluid from the brake caliper (e.g. with brake cleaner).
3. Remove the brake pads (see 4.1.8 "Brake Pads").

Attention!

Be careful of high pressure!
Always wear protective goggles.

The pistons may „shoot out" with significant velocity.

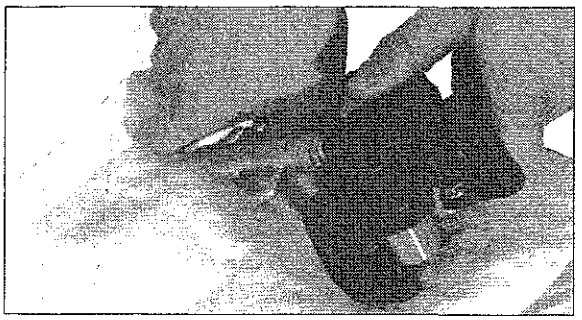

4. Press out the pistons by applying compressed air to the connection hole.

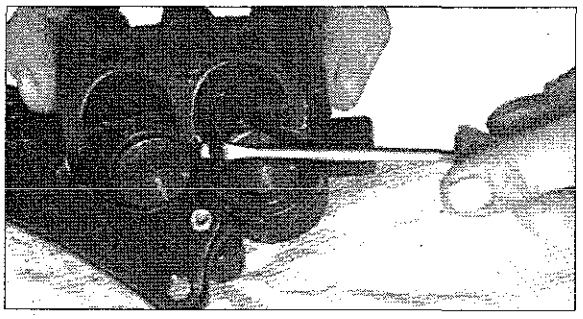

5. Replace the seal rings in the brake caliper.
   Moisten the rings with brake fluid.

Installation

Inspect the pistons and sliding pins for damage, corrosion, etc.
Inspect the seal collars.
Rubber components must be replaced by new parts in case of damage or cracking or, in general, every 4 years.

1. Insert pistons.
2. Lightly grease the sliding pins, install them into the brake caliper along with the adapter plate.
3. Pull the large and small seal collars exactly over the sliding pins.
   The slide covers must snap into the groove on the sliding pin
4. Install the brake pads (see 4.1.8 "Brake Pads").
5. Install the adapter plate with brake caliper
   (see 4.1.7 "Entire Brake Caliper").

Tightening torque:

Brake pad screws, pin:	8^{+2} Nm
Caliper screws:	25^{+5} Nm

4.1.10 Brake Hose

Attention!

Accident risk!
Immediately replace defective brake hoses!
In general, replace brake hoses every four years.

Removal

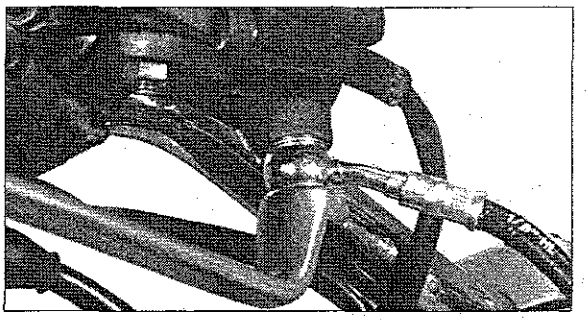

1. Unscrew the banjo bolt from the main brake cylinder.
2. Remove the seal rings.
3. Drain the brake fluid from the brake hose into a suitable container.

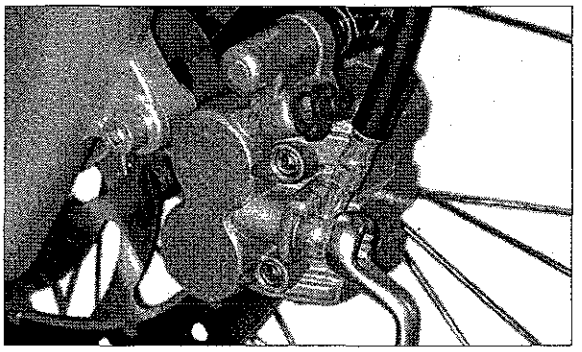

4. Unscrew the banjo bolt from the brake caliper.
5. Remove seals.
6. Remove brake hose.

Inspection

Inspect the brake hose for:

- damage
- poor seal
- kinks
- crimps

Installation

Note:
Always use new seal rings!

Install in reverse order.
Add brake fluid.
Bleed brakes (see 4.1.3 "Bleeding the Brake System").
Perform function test.

Tightening torque:

Banjo bolt:	20^{+2} Nm

4.2 Front Wheel

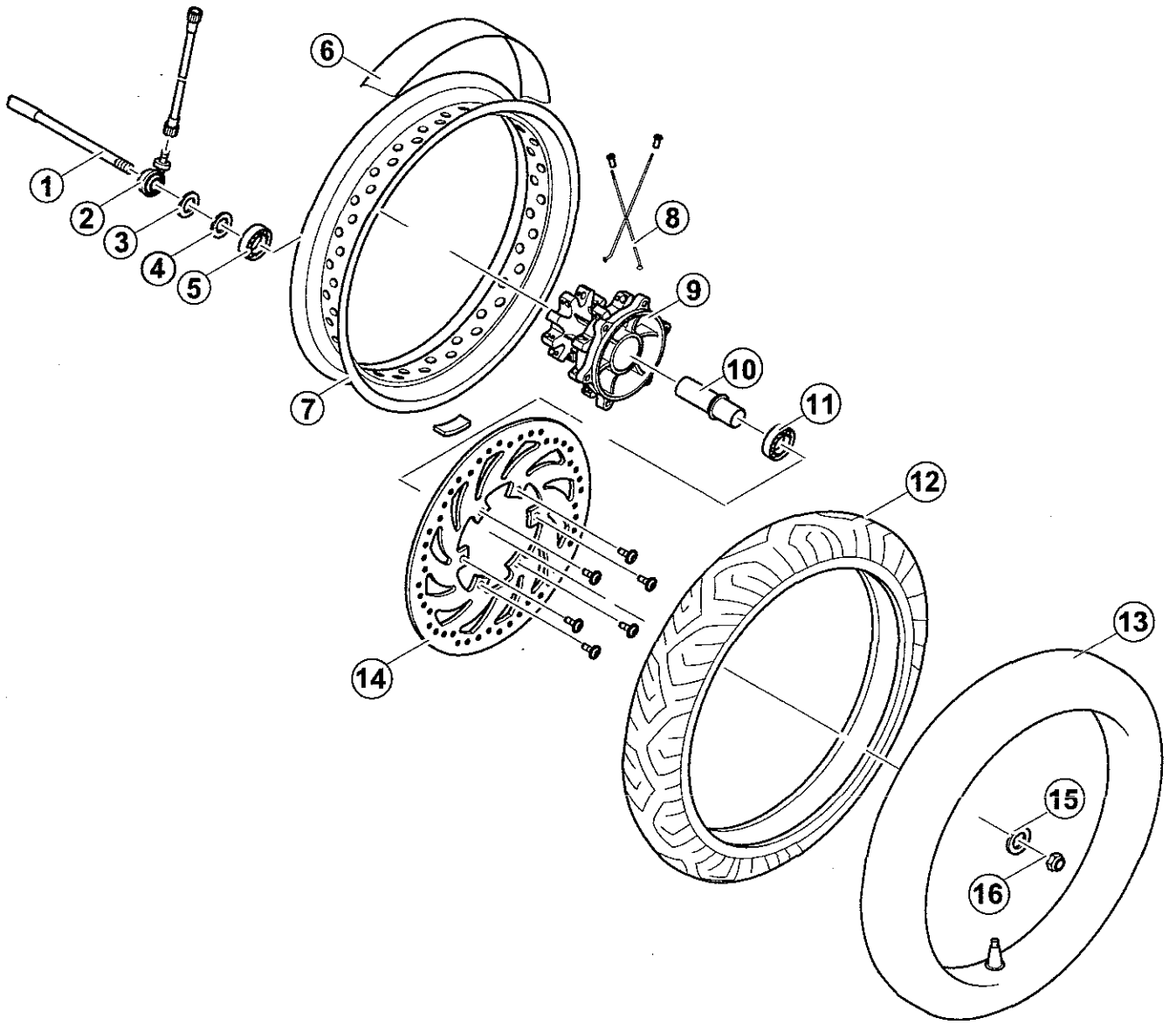

(1) Axle
(2) Speedometer drive
(3) Seal ring
(4) Dog
(5) Ball bearing DIN 625-6204-2RS
(6) Rim strap 25x21
(7) Rim
(8) Spokes
(9) Wheel hub
(10) Spacer sleeve
(11) Ball bearing DIN 625-6204-2RS
(12) Tyres
(13) Air tube
(14) Brake disc
(15) Washer
(16) M14x1.5 nut

4.2.1 Replacing the Front Wheel

Removal

Attention!

The vehicle may fall over.

Properly secure the vehicle on the installation stand before beginning work.
When using tension belts, be careful not to damage the paint.

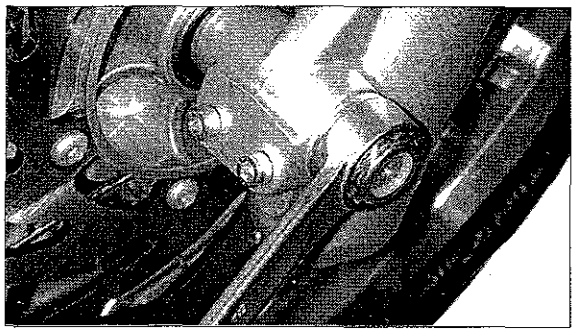

The front wheel must be free of load.

1. Screw off the axle nut.

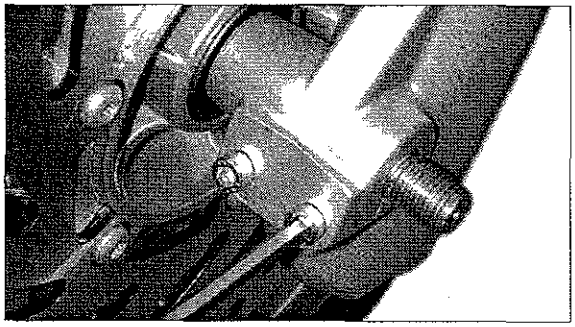

2. Loosen both locking screws.

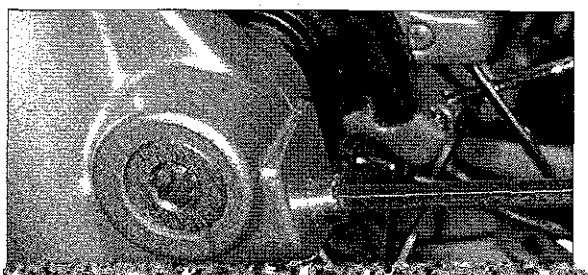

3. Open the left locking screw.

Installation

(For positions, see 4.2 "Front Wheel")

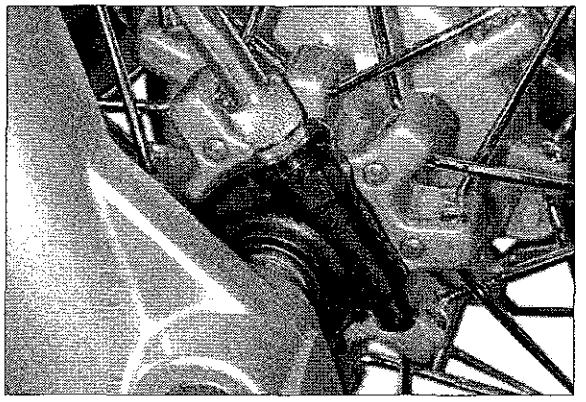

1. Place the front wheel between the fork spars, approximately in its installation position.
   Slide the brake disc into the brake caliper.
2. Place the speedometer drive (13) onto the dog (9) in the wheel.
   The speedometer drive must be aligned parallel to the fork spar.
3. Slide the greased axle (15) far enough from the right fork spar that it is flush against the left bearing.
4. Insert the spacer sleeves (1).
5. Lift on the front wheel.
6. Slide the axle through the left fork spar.
7. Tighten the right locking screws.
8. Screw on the axle nut and tighten.
9. Loosen right locking screw.
10. When the parking brake is pulled, push the telescopic fork the whole way through several times.
11. Tighten all three locking screws.

Tightening torque:

Axle nuts:	60^{+5} Nm
Locking screws:	25^{+5} Nm

4.2.2 Front Brake Disc

Removal

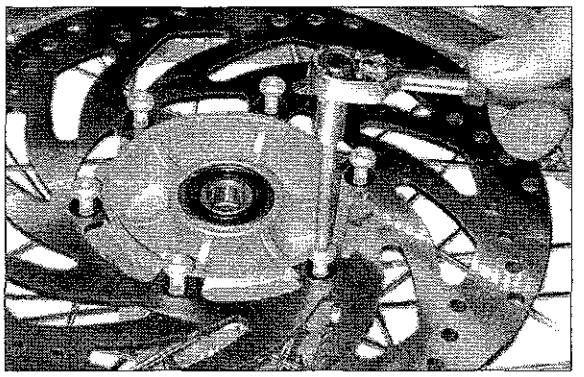

The brake disc is bolted to the wheel hub of the front wheel.

1. Remove the front wheel.
2. Loosen six oval flange head screws, remove the brake disc. It is useful to heat the screws to approx. 80°...100 °C using a hot-air blower. This breaks the safety effect of the micro-encapsulation.

Inspection

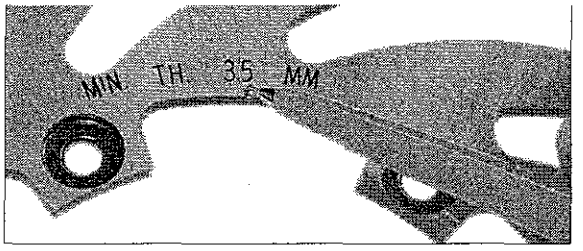

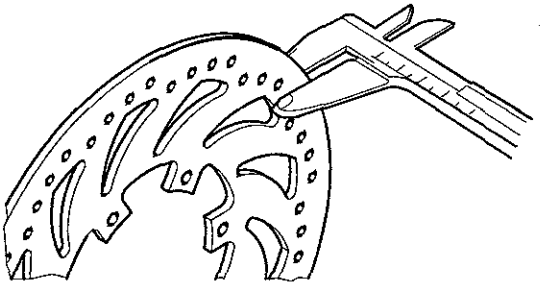

The minimum permissible thickness of the brake disk is shown on the impression.

1. Measure thickness.
   Minimum thickness: **3.5 mm.**
2. Check that the brake disc is level using a straight-edge.
   Maximum deviation: **0.05...0.08 mm.**
3. Check that it is parallel.
   Maximum deviation: **0.03 mm.**
4. Check the eccentricity (mounted on hub, with new bearings installed in the swingarm, measured on outside diameter):
   Maximum deviation: **0.25 mm.**

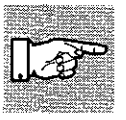

Note:

With an eccentricity of 0.1 mm, it is permissible to unscrew the brake disc from the hub to achieve a reduction in the measurement value by twisting the brake disc and reinstalling it.
If this does not have the desired result, the brake disc must be replaced.

Installation

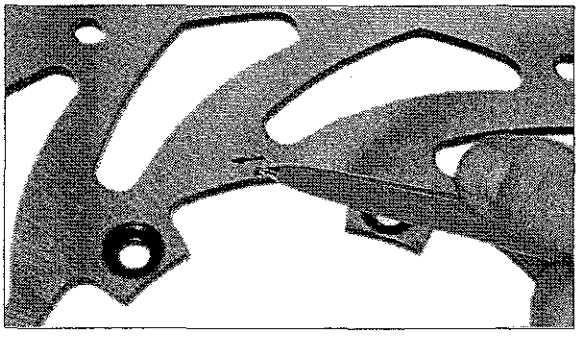

1. Place the brake disc on the adapter with the proper orientation (arrow).
2. Turn the disc one turn with pressure against the adapter to ensure a flat seat.
3. Apply screw locking agent to the screws.
4. Tighten the screws in a crosswise manner.
5. Wipe off excess screw locking agent.
6. Clean the disc with brake cleaner.
7. Install the front wheel.

Tightening torque:

Tallow-drop screws: 10^{+2} Nm

4.2.3 Wheel Bearing

Two deep groove ball bearings DIN 635-6204-2RS serve as the wheel bearing.

Removal

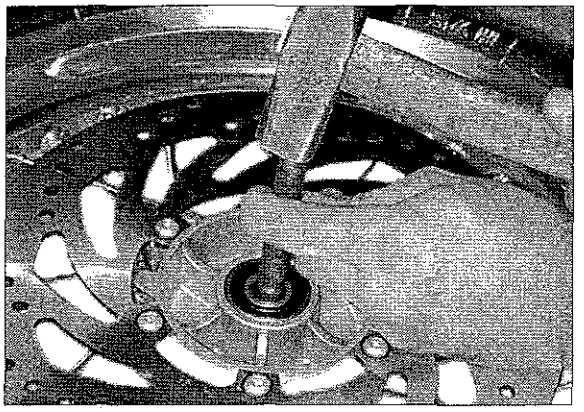

1. Remove the front wheel.
2. Remove the seal ring (3) and dog (4) for the speedometer drive.
3. Carefully pound out the left and right bearing and spacer sleeve using a spike.

Inspection

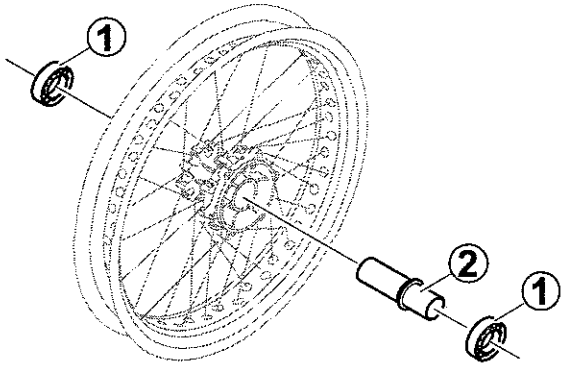

1. Inspect the bearing play of the wheel bearing (1).
2. Measure the length of the spacer sleeve (2).
   minimum length: **65.5 mm**.

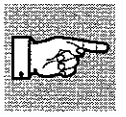

Note:
Should the wheel bearing have too much play, the wheel bearings must be replaced.
If the spacer sleeve (2) length is less than 65.5 mm, it must be replaced.
Otherwise the wheel bearings may be damaged.

Attention!

Possible burns!

Never touch the air outlet of the hot air pistol!
This becomes very hot during operation.
Do not direct the hot air pistol at flammable or heat-sensitive materials.

Installation

1. Heat both wheel bearing seats with a hot air pistol before installation.
2. Install the left wheel bearing.
3. Slide the spacer sleeve in from the right.
4. Install the right wheel bearing.
5. Insert the dog for the speedometer drive and a new seal ring.
6. Install the front wheel.

4.2.4 Speedometer Drive

The speedometer drive cannot be repaired, it can only be replaced.

Removal

Attention!

The brake disc can damage the paint on the fork spars.

Make certain that the brake disc does not touch the fork spars. A cleaning rag should be placed between them.

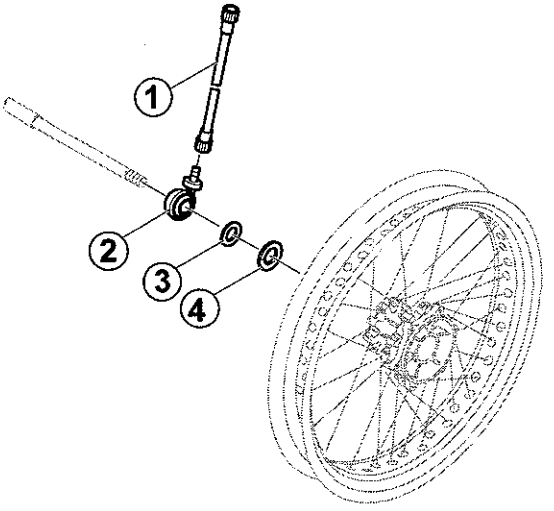

1. Screw off the speedometer shaft (1).
2. Remove the front wheel
   (see 4.2.1 "Replacing the Front Wheel").

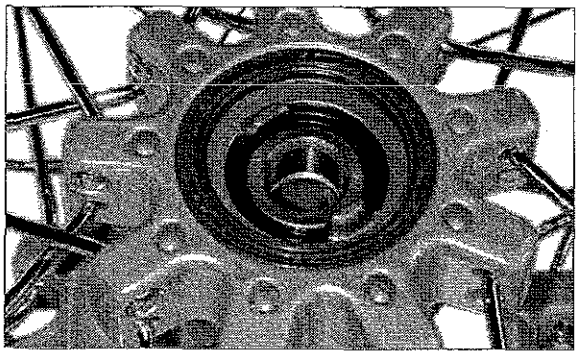

3. Remove the seal ring and dog from the wheel hub.

Inspection

- Check the teeth for completeness and wear,
- Check the seal ring for wear,
- Check the dog for wear.

Replace defective components.

Installation

1. Insert the dog and seal ring into the wheel hub.
2. Lubricate the speedometer drive.
3. Install the front wheel and speedometer drive
   (see 4.2.1 "Replacing the Front Wheel").
4. Screw on the speedometer shaft.

4.3 Rear Brake

Hazard!

Risk of death!

Ineffectual or faulty brake systems put lives at risk! Improper work can impair the functioning of the brake system, thereby reducing the safety of the vehicle in traffic. Perform all work attentively and responsibly, based on this repair manual.

The rear brake is designed as a hydraulic disc brake with a two-piston floating caliper.

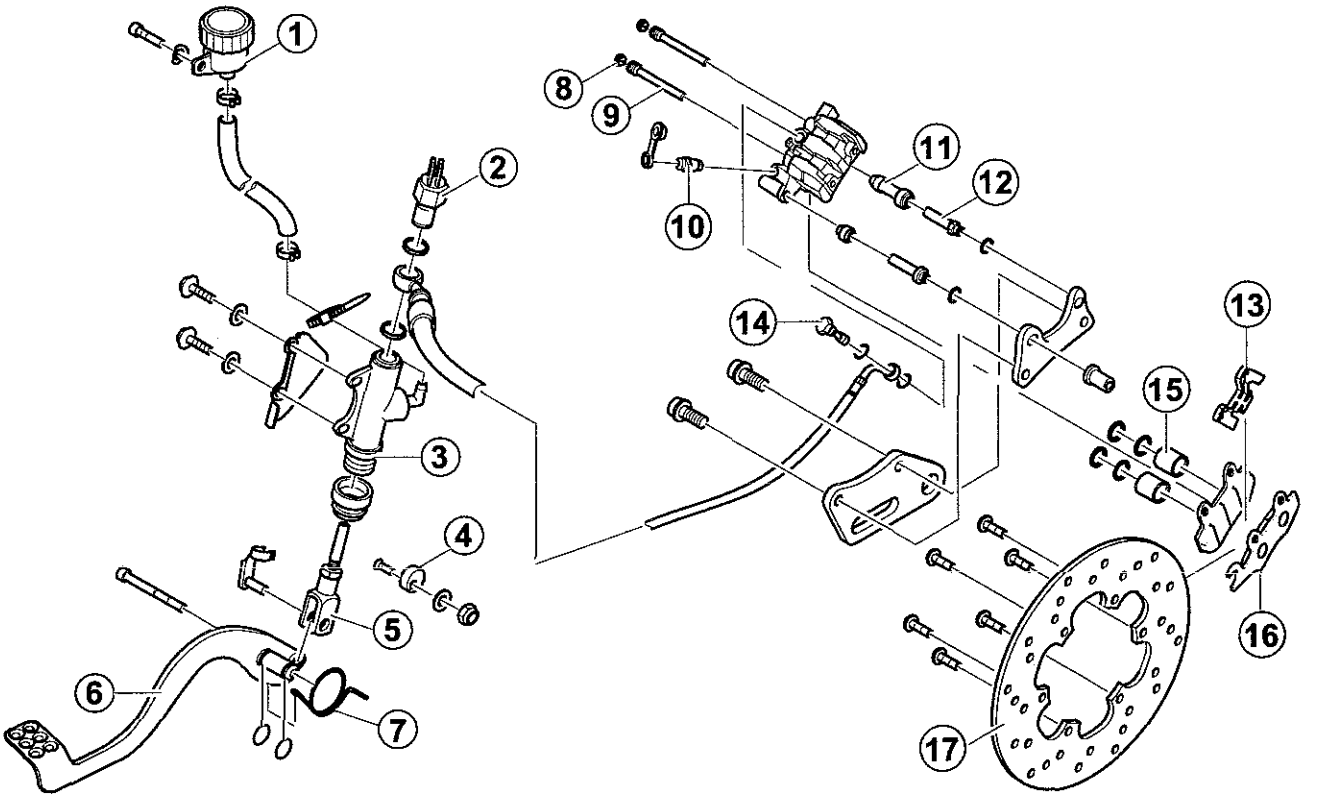

(1) Storage Tank
(2) Brake light switch
(3) Main brake cylinder, diameter 13 mm
(4) Eccentric disc
(5) Pressure rod L 55 mm
(6) Brake lever
(7) Reset spring for brake lever
(8) Cap screw
(9) Retaining bolt
(10) Air bleeding screw
(11) Seal collar
(12) Sliding pin
(13) Tension bracket
(14) Banjo bolt M4x10
(15) Piston
(16) Brake pad
(17) Rear brake disc, diameter 220 mm

4.3.1 Brake Fluid

Attention!

If insufficient brake fluid is present, air can enter the braking system, reducing the braking performance.

Always check the fluid level when ventilating the brakes. Add brake fluid - DOT 4 recommended - if necessary.
Always use the same type of brake fluid. Never mix different types of brake fluid!
Do not use dirty or old brake fluid.
Change the brake fluid every two years.

The storage tank is located on the right underneath the seat on the intake muffler.

Inspection

Position the vehicle such that the storage tank sits horizontally. The brake fluid level must be between the **MAX** and **MIN** markings, never lower!

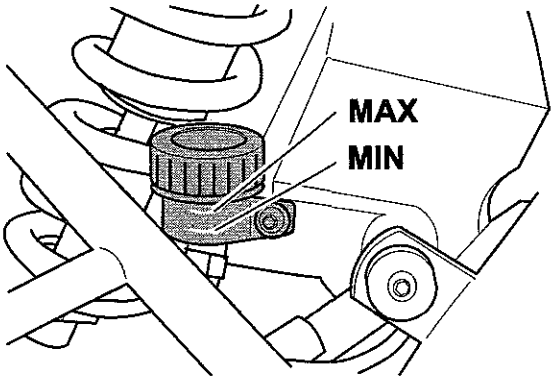

Adding fluid

Attention!

Brake fluid is aggressive and poisonous!
Avoid contact with skin.
Do not pour onto paint, plastic or rubber surfaces.
Immediately wipe up spilled brake fluid.
Always cover sensitive components with a rag while working on the brake system.

Only use new DOT4 brake fluid.
Do not mix different kinds.
Brake fluid absorbs water from the air.
For this reason, only store brake fluid in closed containers.

1. Position the vehicle such that the storage tank sits horizontally.
2. Screw off the cap of the storage tank.
3. Remove the hermetic bellows.
   Inspect the hermetic bellows, replace if damaged.
4. Fill the storage tank up to the MAX mark with brake fluid.
5. Position the hermetic bellows, screw on the cap.

Replacing

The brake fluid must be changed at least every two years. Old brake fluid tends to form bubbles under high stress (long descents/frequent braking), resulting in a significant reduction in braking performance and riding safety.

Environment:

Properly dispose of used brake fluid.

Use a filling device to change the brake fluid - follow the manufacturer's instructions:

1. Position the vehicle horizontally.
2. Remove the dust cap from the air bleeding screw.
3. Place a ring spanner and transparent hose on the air bleeding screw.
4. Place the other end of the hose in a suitable container.
5. Screw off the storage tank cap.
6. Remove the hermetic bellows.
7. Open the air bleeding screw.
8. Pump all of the brake fluid into the container by operating the brake lever.
   While doing so, constantly add new brake fluid.

Note:

New brake fluid is lighter in colour than used. Watch the brake fluid being pumped out. When it becomes light, the old brake fluid has been completely replaced by the new fluid.

9. Close the air bleeding screw.
10. Add new brake fluid up to the MAX marking on the storage tank.
11. Position the hermetic bellows.
12. Screw on the storage tank cap.
13. Bleed brake.
14. Perform function test.

Environment:

Properly dispose of used brake fluid.

4.3.2 Bleeding the Brake System

Use a bleeding device to bleed the brake
- follow the manufacturer's instructions or do as follows:

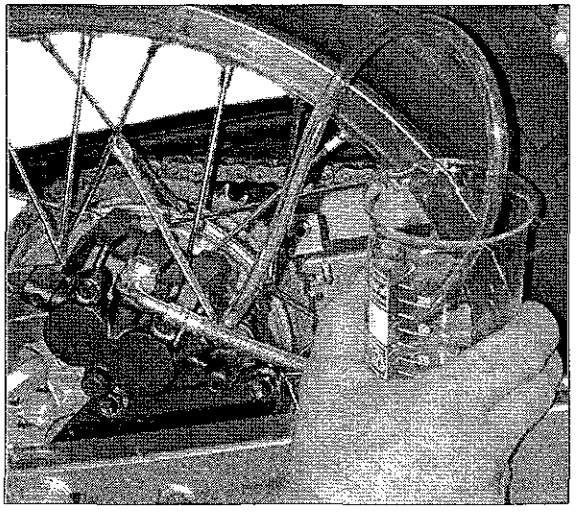

1. Position the vehicle horizontally.
2. Unscrew the cap on the storage tank, add brake fluid up to the MAX marking of the storage tank.
3. Screw the cap onto the storage tank.
4. Remove the dust cap from the air bleeding screw.
5. Place a ring spanner and transparent hose onto the air bleeding screw, place the other end of the hose in a suitable container filled with brake fluid.
6. Open the air bleeding screw, work the brake lever once and stop.
7. Close the air bleeding screw.
8. Let go of the brake lever, pump several times (10x), hold the lever down.
9. Open the air bleeding screw.
   Old brake fluid and air escape.
10. Close the air bleeding screw.
11. Repeat the process until the escaping brake fluid has no bubbles.
12. Remove the ring spanner and hose, return the dust cap.
13. Check the fluid level, add brake fluid up to the MAX marking of the storage tank, if necessary.
14. Perform function test.

Note:
Always make certain that sufficient brake fluid is present in the storage tank.
Add brake fluid, if necessary.

Environment:

Properly dispose of used brake fluid.

4.3.3 Storage Tank

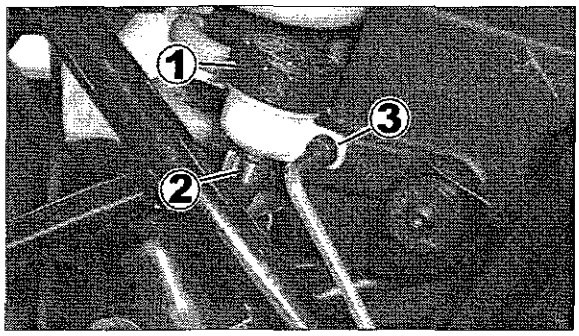

Removal

1. Position the vehicle horizontally.
2. Screw off the cap (1), remove the hermetic bellows and inspect.
3. Suck the brake fluid out of the storage tank (e.g. with suitable syringe).
4. Open the clamp (2) with a small screw driver.
5. Pull off the, inspect, replace if necessary (see 4.3.4 "Hose").
6. Unscrew the screw (3), remove the storage tank.

Installation

Install in reverse order.

1. Add brake fluid. Bleed the brake system (see 4.3.2 "Bleeding the Brake System").
2. Perform function test.

Tightening torque:

Screw: 2^{+1} Nm

4.3.4 Hose

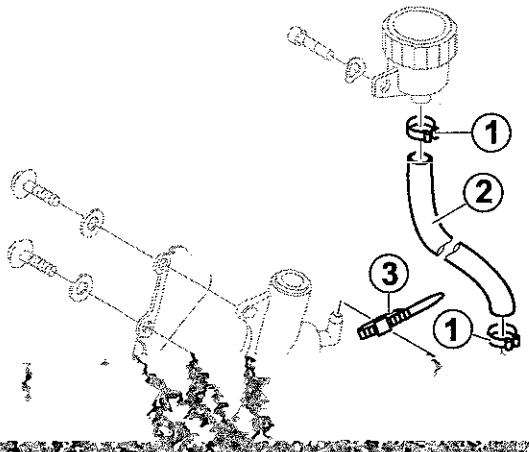

Removal

1. Unscrew the cover plate of the main brake cylinder.
2. Open the cable binder (1).
3. Unscrew the storage tank.
4. Screw off the storage tank cap.
5. Remove the hermetic bellows.
6. Completely drain the brake fluid out of the storage tank and hose into a suitable container.
7. Open the hose clamps (2), remove the hose (3).

Installation

4.3.5 Brake Hose

Attention!

Accident risk!
Immediately replace defective brake hoses!
In general, replace brake hoses every four years.

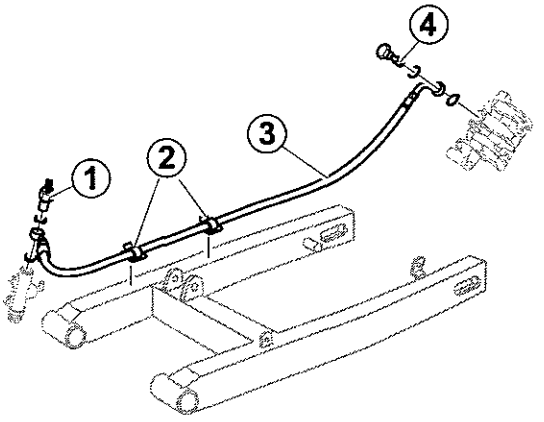

Removal

1. Unscrew the storage tank.
2. Open the cable binder and let the storage tank hang down. The brake fluid level must be under the level of the main brake cylinder.
3. Push back the rubber cap of the brake light switch (1), disconnect the contact.
4. Screw off the brake light switch, remove the seal rings.

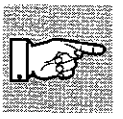

Note:
Place cleaning paper around the main brake cylinder before screwing off the brake light switch to soak up any brake fluid that might flow out.
The openings of the brake hose must always point upward.

5. Remove the banjo bolt (4) and seals from the brake caliper.
6. Let the hose drain into a suitable container.
7. Press the brake hose out of the adhesive pads (2)

Inspection

Inspect all parts for damage, poor seal, kinks, crushed points, etc. and replace, if necessary.

Installation

1. Screw the brake hose (3) tightly to the rear brake caliper with the banjo bolt and new seal rings.
2. Press the brake hose into the adhesive pads (2).
3. Screw the brake hose tightly to the main brake cylinder with the banjo bolt (4) and new seal rings.
4. Connect the plug contacts, slide the rubber cap (1) over.
5. Screw on the storage tank, close the cable binder.
6. Completely bleed the brake system (see 4.3.2 "Bleeding the Brake System"), perform a function test.

Tightening torque:

Banjo bolt:	20^{+2} Nm
Brake light switch:	20^{+2} Nm

4.3.6 Adhesive Pads

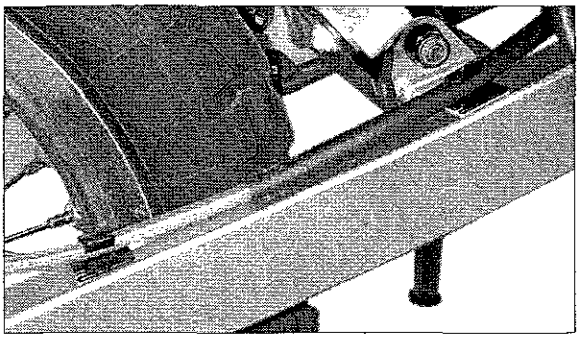

Adhesive pads fix the rear brake hose to the rocker arm. Defective adhesive pads must be replaced.

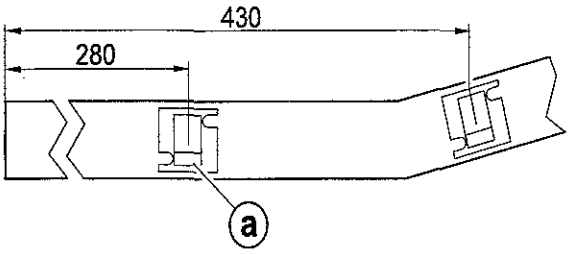

1. Degrease the bonding points before bonding.
2. Pull off the protective foil.
3. Place the open side (a) of the adhesive pads outwards as shown in the figure.
   Observe the dimensions
4. Press on the adhesive pads

4.3.7 Brake Caliper

Removal

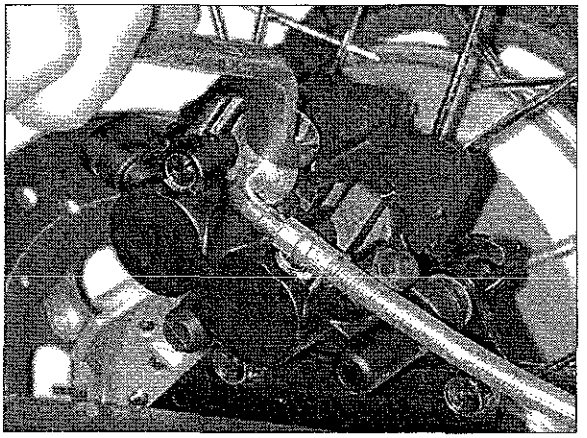

1. Screw off the banjo bolt, remove the two seal rings.
2. Wrap cleaning paper around the brake hose and banjo bolt.
3. Elevate the opening of the brake hose, fasten it to the frame, if necessary.
   This prevents the brake hose from draining. Doing so simplifies the bleeding process.

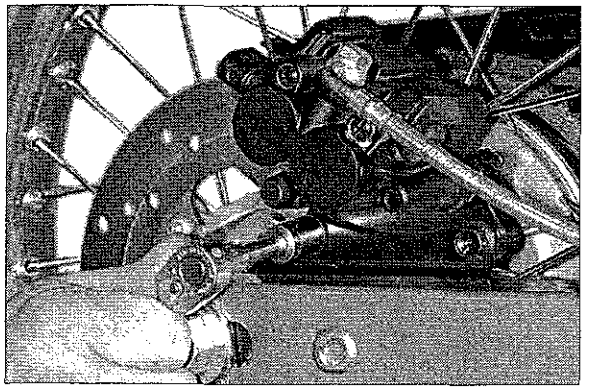

4. Unscrew the two screws.
5. Remove the brake caliper from the adapter plate.

4.3.8 Brake Caliper/Components

Removal

1. Remove the brake caliper.
2. Clean the brake fluid from the brake caliper (e.g. with brake cleaner).
3. Remove the brake pads (see 4.3.9 "Brake Pads").

Attention!

Be careful of high pressure!
Always wear protective goggles.

The pistons may „shoot out" with significant velocity.

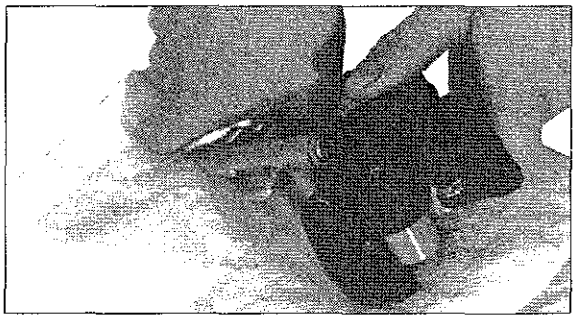

4. Press out the pistons by applying compressed air to the connection hole.

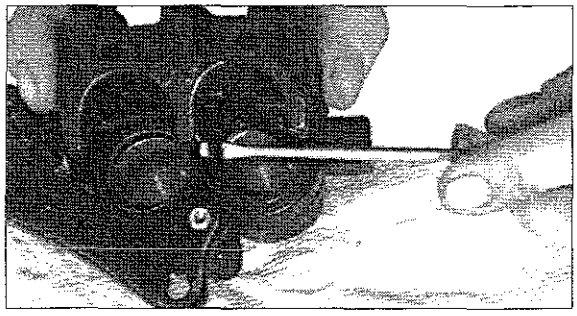

5. Replace the seal rings in the brake caliper.
   Moisten the rings with brake fluid.

Installation

Inspect the pistons and sliding pins for damage, corrosion, etc.
Inspect the seal collars.
Rubber components must be replaced by new parts in case of damage or cracking or, in general, every 4 years.

1. Insert pistons.
2. Lightly grease the sliding pins, install them into the brake caliper along with the adapter plate.
3. Pull the large and small seal collars exactly over the sliding pins.
   The slide covers must snap into the groove on the sliding pin
4. Install the brake pads (see 4.1.8 "Brake Pads").
5. Install the adapter plate with brake caliper (see 4.1.7 "Entire Brake Caliper").

Tightening torque:

Brake pad screws, pin:	8^{+2} Nm
Caliper screws:	25^{+1} Nm
Sealing plugs:	5^{+1} Nm

4.3.9 Brake Pads

4.3.10 Brake Lever

Removal

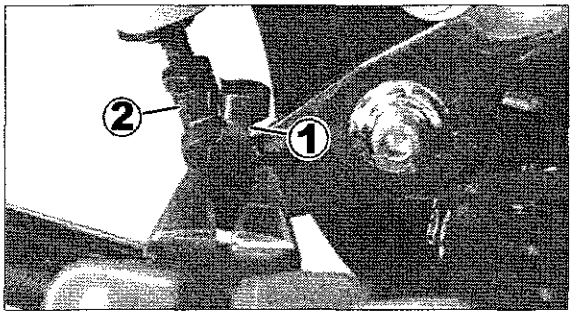

1. Remove the friction spring from the pin (1) of the pressure rod (2) pull it out of the fork head and brake lever.
2. Remove the pressure rod.

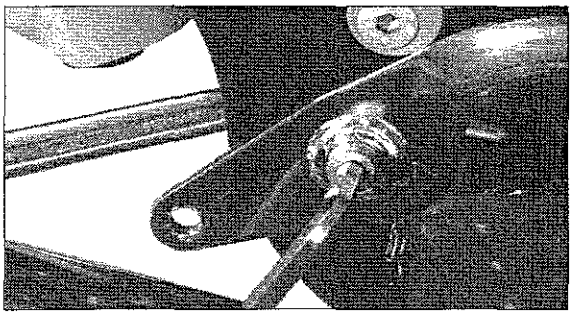

3. Unscrew the screw, holding the nut still.
4. Pull the brake lever and spring out of the frame.

Installation

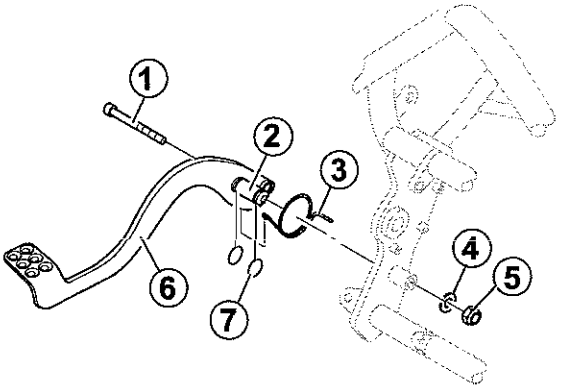

1. Inspect the O-rings (7) on the bearing pins (2) of the brake lever (6), replace if necessary.
2. Grease the bearing pins.
3. Latch the spring (3) in the brake lever and slide it onto the pin.
4. Slide the cylinder screw (1) through the bearing pins.
5. Insert the bearing pins into the frame. In doing so, insert the spring into the corresponding hole in the frame and use force to lift it onto the spring hanger.
6. Insert the washer (4) and screw on the nut (5).
7. Adjust the play (A) of the break lever.

Adjusting the rear wheel brake

Attention!

Accident risk!
There must be at least clearance of 1 mm between the eccentric disc (9) and the brake lever (6).

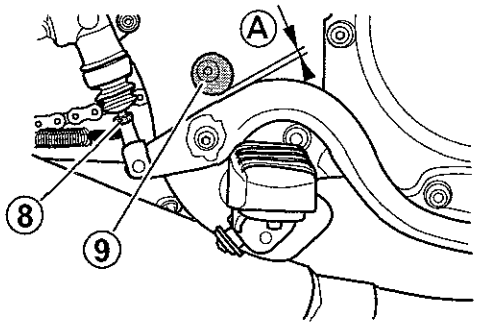

The position of the foot brake lever with respect to the foot rest can be adjusted with the eccentric disc (9).
After re-adjusting the foot brake pedal, adjust a clearance of **(A) = 1...1.5 mm** using the adjusting nut (8) at the pressure rod.

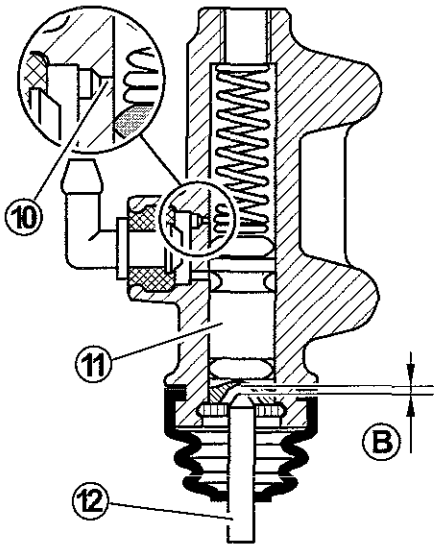

This results in a clearance of **(B) approx. 1...1.5 mm** between the end of the pressure rod (12) and the face of the piston (11).

If this adjustment is not made, there is a risk that the equalisation hole (10) may remain blocked.
The brake fluid can no longer flow back. The brake pressure is maintained, the brake system overheats and the wheel may jam! Damage to the brake system and higher risk of accidents results.

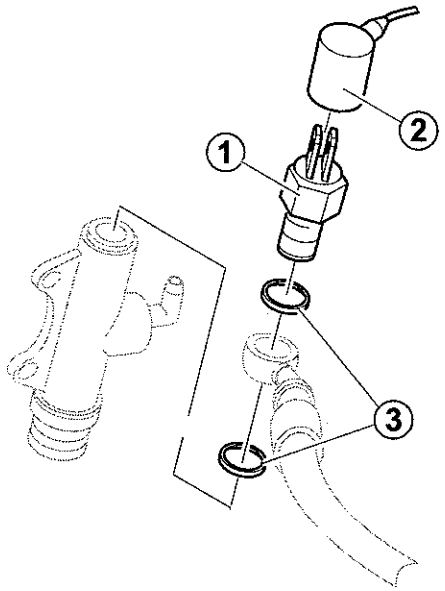

4.3.11 Rear Brake Light Switch

Removal

1. Unscrew the storage tank.
2. Open the cable binder and let the storage tank hang down. The brake fluid level must be under the level of the main brake cylinder.
3. Slide back the rubber cap (2).
4. Disconnect the plug contacts.
5. Place cleaning paper around the main brake cylinder to soak up any brake fluid which may flow out.
6. Unscrew the brake light switch (1), remove the seal rings (3).
   The brake hose must always point upward.

Testing

The brake light switch can only be tested while installed and with a functional brake system.
Use a voltmeter set to the 20V range for measuring.

1. Switch on the ignition.
   The 12V vehicle power supply is on the red/black cable against the ground.
2. Operate the foot brake lever.
3. Test the voltage on the black cable.
   - 12 V: Switch OK.
   - 0 V: Voltage: Switch defective, replace.

Installation

Always use new seal rings.
Inspect the seal surfaces on the hose, main brake cylinder and switch.
Rubber components must be replaced by new parts in case of damage or cracking or, in general, every 4 years.

1. Screw the brake hose with the brake light switch and new seal rings onto the main brake cylinder.
2. Connect the plug contacts, slide the rubber cap over.
3. Bleed the brake system.
4. Perform function test.

Tightening torque:

Brake light switch:	$20^{+2,5}$ Nm

4.3.12 Main Brake Cylinder

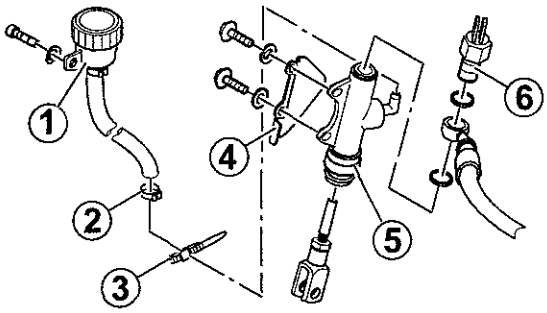

Removal

1. Unscrew the brake light switch (6), remove the brake hose and seal rings.
2. Remove the cable binder (3), screw off the storage tank (1) and hold it downward.
3. Open the clamp (2), pull out the hose with the storage tank.
4. Pour the brake fluid into a suitable container, lay the storage tank on its cover.
5. Unscrew the two screws, remove the cover plate (4).
6. Pull the main brake cylinder (5) away from the pressure pins of the brake lever.

Installation

1. Slide the main brake cylinder onto greased pressure pins.
2. Fasten the main brake cylinder to the frame with the cover plate and both screws.
3. Mount the hose with the storage tank and fluid.
4. Close the clamp. Undamaged clamps can be reused.
5. Bleed the system (see 4.1.3 "Bleeding the Brake System").
6. Perform function test.

Tightening torque:

M6 screws: 10^{+2} Nm

4.3.13 Seal Set

Replacing

Rubber components must be replaced by new parts in case of damage or cracking or, in general, every 4 years.

4.4 Rear Wheel

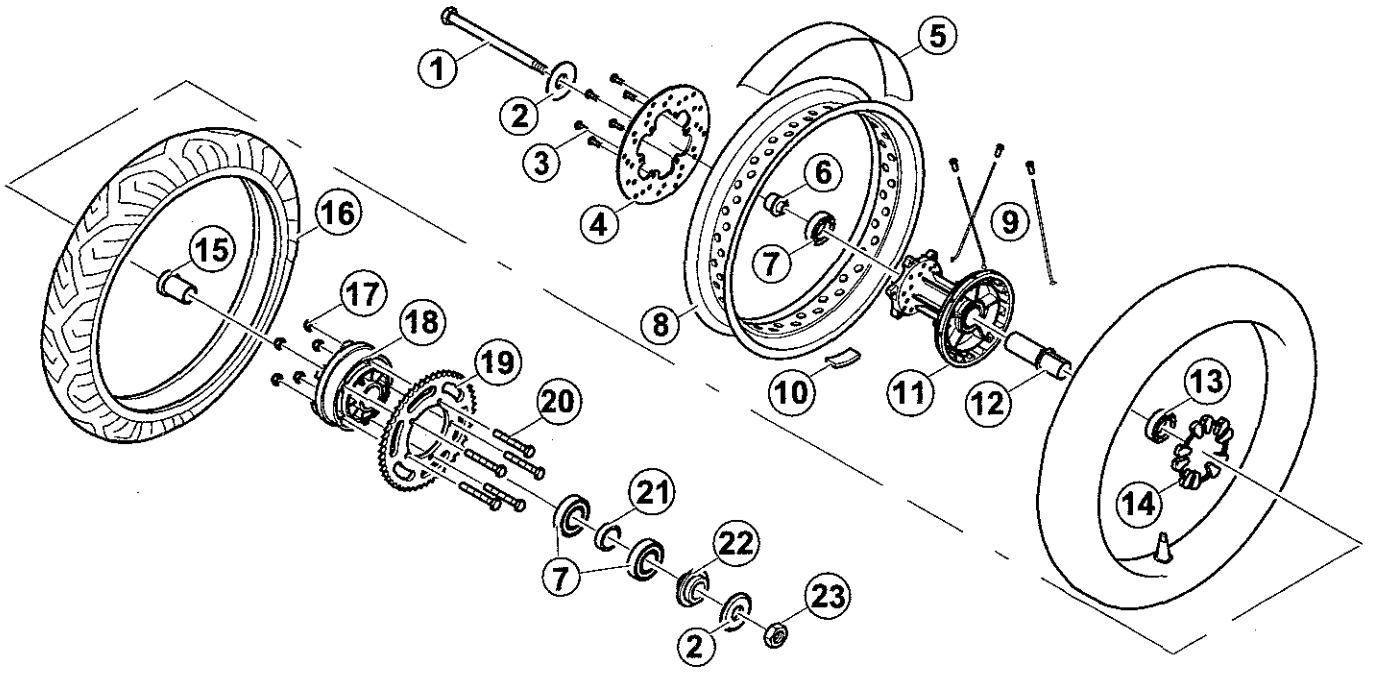

(1) Axle
(2) Axle washer
(3) M6x16 screws
(4) Rear brake disc
(5) Rim strap
(6) Reducing bush
(7) Deep groove ball bearing DIN 625-6204-7RS
(8) Rim
(9) Spokes
(10) Balancing piece
(11) Wheel hub, complete
(12) Spacer sleeve
(13) Ball bearing, dog side DIN 625-6204-2RS
(14) Dog rubber piece
(15) Inner reducing bush
(16) Tyres
(17) M8 hexagon nuts
(18) Dog
(19) Chain plate SX=52 teeth, SM=49 teeth
(20) M8x45 cylinder screws
(21) Spacer sleeve
(22) Outer reducing bush
(23) Hexagon nut M16x1.5

4.4.1 Replacing the Rear Wheel

Removal

Attention!

The vehicle may fall over!
Properly secure the vehicle on the installation stand before beginning work.
Be careful not to damage the paint when using tension belts.

1. Unload the rear wheel.

Note:
Do not operate the foot brake lever.

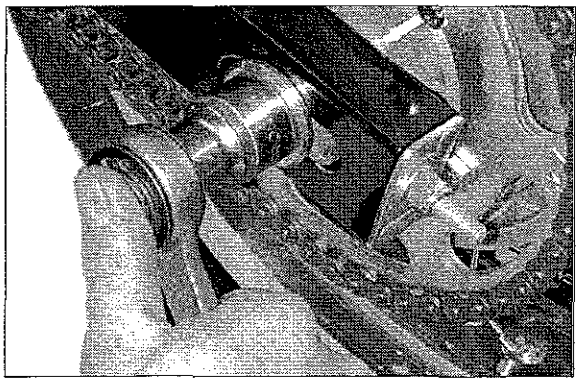

2. Screw off the left axle nut.

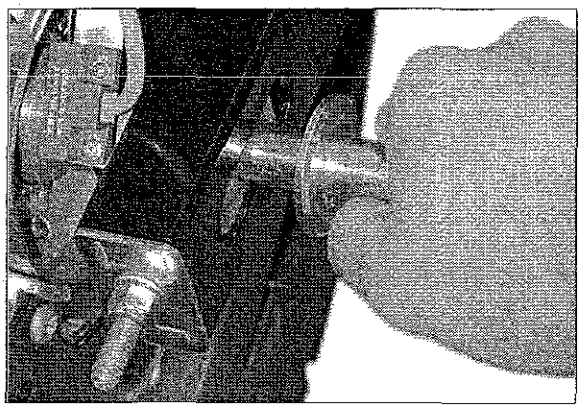

3. Pull the axle out halfway to the right.
4. Remove the chain.
5. Pull the axle out completely.
6. Remove the adapter plate with the brake caliper for the counter-bearing.
7. Carefully pull out the wheel to the rear.

Installation

1. Place the rear wheel between the swingarms.
2. Mount the chain.
3. Slide the axle into the chain adjuster from the right.
4. Insert the adapter plate.
5. Slide the axle through the adapter plate and wheel, screw on the axle nut.
6. Adjust the chain slack
   (see 4.5.2 "Adjusting the Chain Slack").
   The cover plate of the chain adjuster must sit tight against the swingarm on both sides.

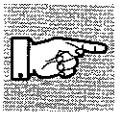

Note:

Place a 4 mm spike between chain and chain plate.
Turn the wheel a ¼ to ½ turn so that the cover plate of the chain adjuster sits tight against the swingarms.

Important!

Do not apply force. Otherwise the chain/chain plate may get damaged.

7. Tighten the axle nut, observe the specified torque.
8. Inspect the wheel tracking.
9. Expand the brake pads.
10. Install the brake caliper over the brake disc.
11. Observe the specified torque and use screw locking agent.
12. Operate the foot brake lever until the you feel the pressure point and the braking effect sets in.
13. Test the smooth rotation of the wheel.

Tightening torque:

Axle nuts:	100^{+10} Nm

4.4.2 Chain Plate and Dog

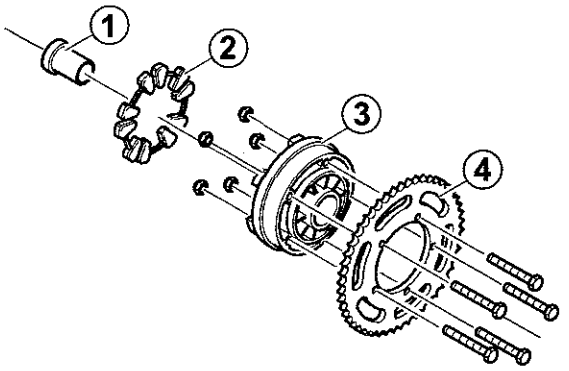

The chain plate is screwed with the dog.

(1) Inner reducing bush
(2) Dog rubber piece
(3) Dog
(4) Chain plate

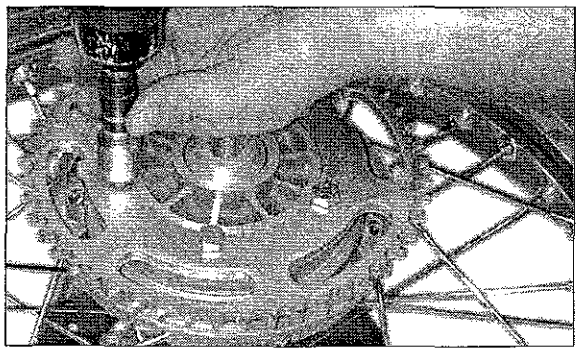

Removal

1. Remove the rear wheel (see 4.4 "Rear Wheel").
2. Unscrew the five hexagon head screws.
3. Remove the chain plate
4. Remove and inspect the dog and dog rubber piece.
   The rubber piece must not be porous, damaged or cracked.
   Replace a defective rubber piece.
5. Remove the screws and self-tightening nuts.

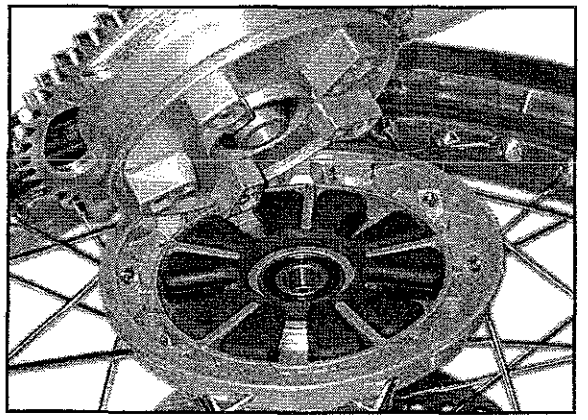

Installation

1. Install a new chain plate with new nuts to the dog.
2. Insert the dog rubber piece into the wheel.
   Spray the dog with silicon spray to ease the installation.
3. Insert the dog with the chain plate.
4. Mount the wheel
   (see 4.4.1 "Replacing the Rear Wheel").

Tightening torque:

Chain plate mount:	30^{+5} Nm

4.4.3 Wheel Bearing

Inspect the bearing play of the wheel bearing.
Should the wheel bearing have too much play or the wheel no longer runs smoothly, the wheel bearings must be replaced.
Two deep groove ball bearings DIN 635-6204-2RS serve as the wheel bearing.

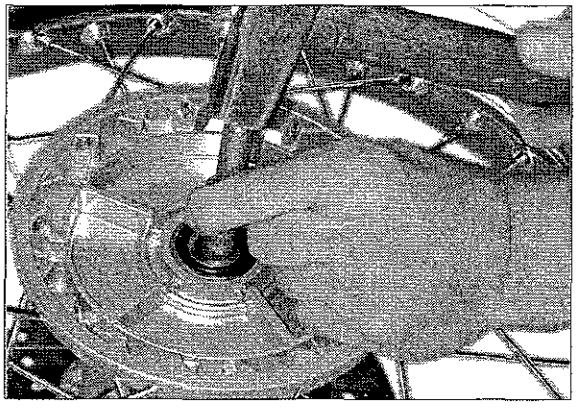

Removal

1. Remove the rear real
   (see 4.4.1 "Replacing the Rear Wheel").
2. Remove the chain plate
   (see 4.4.2 "Chain Plate and Dog").
3. Remove the right side reducing bush.
   To do this, pound carefully and evenly on the circumference of the reducing bush with a spike from the left side of the wheel.
4. Remove the left side reducing bush.
5. Carefully pound out the left and right bearing and spacer sleeve using a spike.

Installation

1. Measure the spacer sleeve: **minimum 110 mm**, replace if necessary.

Note:
If it is shorter than 110 mm, the spacer sleeve must be replaced. Otherwise the wheel bearings may be damaged.

Attention!

Possible burns!
Never touch the air outlet of the hot air pistol!
This becomes very hot during operation.
Do not direct the hot air pistol at flammable or heat-sensitive materials.

2. Heat both wheel bearing seats with a hot air pistol before installation.
3. Install the left wheel bearing (chain side).
4. Slide the spacer sleeve in from the right.
   The centring ring points toward the brake disc side.
5. Install the right wheel bearing and the reducing sleeves on both sides.
6. Install the rear wheel.

4.4.4 Brake Disc

Removal

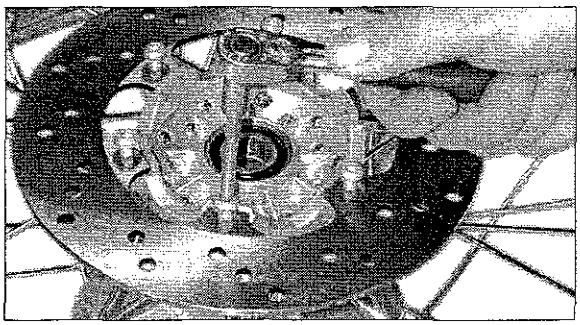

1. Remove the rear wheel
   (see 4.4.1 "Replacing the Rear Wheel").
2. Unscrew the six Torx screws, remove the brake disc.
   If necessary, heat the aluminium to approx. 80 ° - 100 °C using a hot air pistol.

Inspection

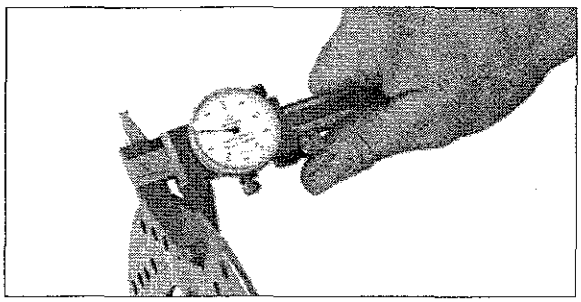

1. Inspect the thickness
   Minimum thickness: **min. 3.5 mm.**
   If the thickness is **less than 3.5 mm**, the brake disc must be replaced.

2. Check that the brake disc is level using a straight-edge.
   Maximum deviation: **0.05...0.08 mm.**

4.5 Chain

chain (428) 1/2´´x5/16´´- 134 links (SX)
- 132 links (SM)
Closing link 1/2´´x5/16´´

4.5.1 Chain Maintenance

Regular chain maintenance significantly lengthens its service life. Make certain the chain is clean, lubricated and has the correct slack.
Clean the chain with large amounts of water with no pressure. Treat it with O-ring chain spray.

4.5.2 Adjusting the Chain Slack

Attention!

Incorrect chain slack overloads the engine and other important components!
Always keep the chain slack within the specified limits (60 - 70 mm).

Position the motorcycle vertically to inspect the chain slack. Support the vehicle under the front part of the frame with a suitable support. The rear wheel must turn freely.

Hazard!

Risk of injury!
Make certain that your fingers do not come between the chain and the chain wheel.

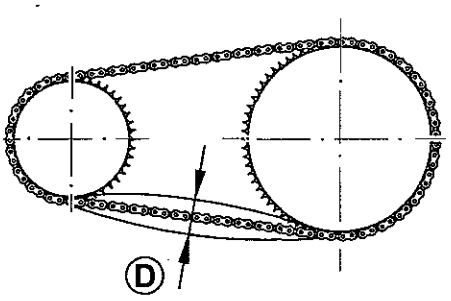

Turn the rear wheel several times. Measure the chain slack (D) at various points to find the tightest point. The valid measurement must be taken at the tightest point of the chain. To do this, move the chain up and down.

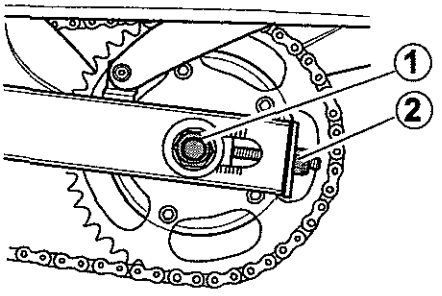

If the chain is too tight (slack(D) less than 60 mm) or too loose (slack (D) more than 70 mm), adjust the chain slack:

1. Loosen the axle nuts (1) on each side by approx. 1 turn.
   Reducing the chain slack: Turn the nuts (2) on each side of the chain adjuster the same distance to the right.
   Increasing the chain slack: Turn the nuts (2) on both sides of the chain adjuster the same distance to the left and push the wheel forward.
2. Tighten the axle nuts (1).
3. After completing the adjustment, check the wheel track and correct it, if necessary.

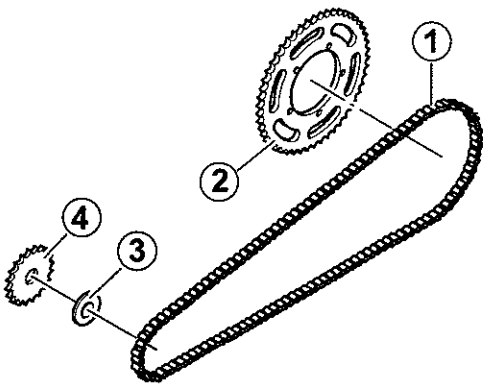

4.5.3 Chain Set

The chain set consists of:

(1) Chain
(2) Chain plate SX=52 teeth, SM = 49 teeth) (2)
(3) Locking plate *
(4) Pinion

* 3746032000 for threaded drive shaft, 6.5 mm long, bored out nut
* 3746037000 (borehole of 17 mm) for threaded drive shaft, 9.7 mm long

Replacing the chain

Hazard!

Risk of injury!
Make certain that your fingers do not come between the chain and the chain wheel.

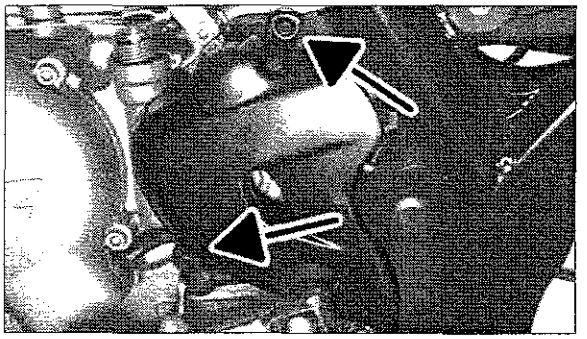

1. Unscrew the two screws of the pinion cover.
2. Remove the pinion cover.

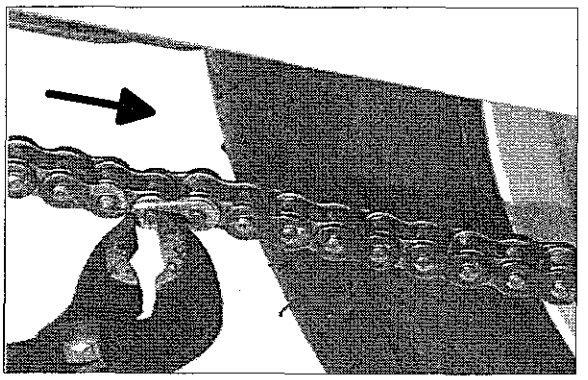

3. Carefully open the chain lock with a pliers.
4. Remove the chain lock.
5. Remove the chain.
6. Loosen the axle nuts by approx. 1 turn.
7. Mount the new chain.
8. Loosen the chain adjuster on both sides until the chain lock can be inserted.
9. Insert the chain lock and close it.
   The closed end of the chain lock must point in the direction that the chain moves (arrow).
10. Adjust the chain slack (see 4.5.2 "Adjusting the Chain Slack").
11. Screw on the axle nuts.
12. Spray the O-ring with chain spray.
13. Mount the pinion cover.

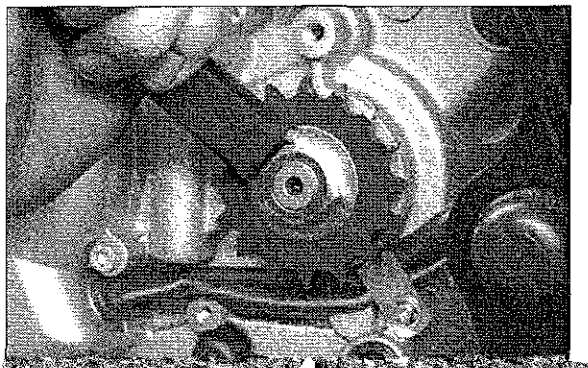

Replacing the pinion

1. Unscrew the two screws of the pinion cover.
2. Remove the pinion cover.
3. Bend up the locking plate.
4. Engage a gear.
5. Unscrew the nut.
6. Remove the pinion.

4.6 Tyres

Attention!

Worn tires reduce riding stability and can lead to accidents.
Only the tires certified for the vehicle may be used (see the technical data and entries in the certification documents).
Make certain that the tire pressure is correct.

The tires must have the minimum legally required tread depth. Independent of this, the tires should be replaced when they have a minimum tread depth of **2 mm**.
Tire installation and balancing machines must be used to replace the tires.
Consult the operating manual of the machine manufacturer.
The use of other tools and equipment may lead to damage or unbalanced wheels.
The static unbalanced mass of a wheel in the direction of travel should ideally be 0 g. A maximum of 50 g is permissible.
The directional markings must be observed when installing the tires. These specify the direction of travel of the vehicle.

Tire pressure

Load	1 or 2 persons 75 kg each		maximum permissible axle load	
	SX	SM	SX	SM
Front	190 kPa 1.9 bar 28 psi	180 kPa 1.8 bar 26 psi	190 kPa 1.9 bar 28 psi	180 kPa 1.8 bar 26 psi
Rear	200 kPa 2.0 bar 29 psi	230 kPa 2.3 bar 33 psi	250 kPa 2.5 bar 36 psi	260 kPa 2.6 bar 38 psi

4.7 Spoke Fitting

4.7.1 General Procedure

1. Place rim and hub on a table, and have the spokes ready.
2. Place blocks of wood at least at 3 positions under the rim, so that the rim is located at the right level to the hub.
3. Insert the spokes with the threads through the hub.
4. Slide the spoke nipples through the rim and screw the spoke nipples to the spokes.
5. Tighten the spoke nipples cautiously.
   Make certain that the rim always remains at a right angle to the axle.
6. Mount wheel bearing and axle.
7. Check the eccentricity.
   If the differences are too big, adjust the eccentricity via the spoke nipples and check again.

4.7.2 Spoke Fitting Values for SX

SX front wheel	Components
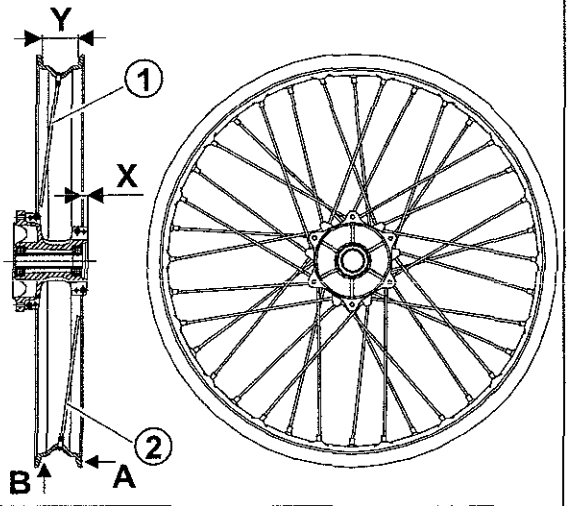	Two different spoke types are used on the SX front wheel: (1) Short spoke, 235 mm, 141°, 18 pcs. (brake disc side) (2) Long spoke, 277 mm, 144°, 18 pcs. Spoke nipple DIN 74371 M3.5-6.4x18-c $2.0^{+0.5}$ Nm Rim 1.85x21" Front wheel hub, Bassano Grimeca company: - X = 25.5 mm - Y = 47.5 mm Position of eccentricity measurement - A = lateral eccentricity at the rim edge: 0.5 mm - B = vertical eccentricity at the rim edge:0.5 mm
SX rear wheel	**Components**
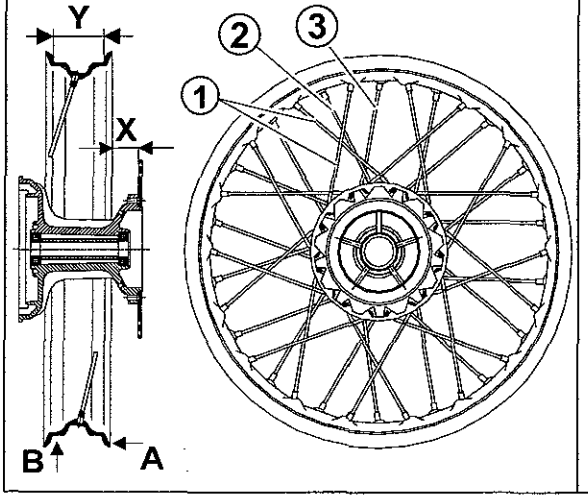	Three different spoke types are used on the SX rear wheel: (1) Short spoke, 172 mm, 168°, 18 pcs. (2) Long spoke, 187 mm, 122°, 9 pcs. (brake disc side) (3) Spoke, 184 mm, 122°, 9 Stk. (brake disc side) Spoke nipple DIN 74371 M4x6.4x18-c, $2.5^{+0.5}$ Nm Rim 2.50x18" (Enduro) Rear wheel hub, Bassano Grimeca company: - X = 33.3 mm - Y = 63.5 mm Position of eccentricity measurement - A = lateral eccentricity at the rim edge: 0.5 mm - B = vertical eccentricity at the rim edge:0.5 mm

4.7.3 Spoke Fitting Values for SM

SM front wheel	Components
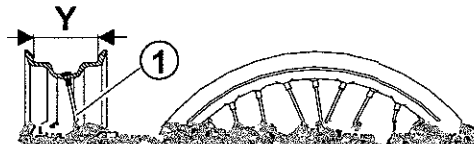	Two different spoke types are used on the SM front wheel: (1) Long spoke, 178 mm, 143°, 18 pcs. (2) Short spoke, 171 mm, 147°, 18 pcs. (brake disc side)

5 Electrical Installation

5.1 General Principles

Connect all leads as per circuit diagram (appendix).
Always disconnect the battery from the vehicle network or remove the fuses before performing work on the electrical installations and fuel supply.
To test electrical components, reconnect the battery. Careful work is required.

In general, the following applies:

- During disconnection, first disconnect the negative pole, then the positive pole! During connection, first connect the positive pole, then the negative pole!
- All connections must be clean with secure contacts.
- The connection between the wire and connection terminals must always be inspected for tears in the individual wires.
- Replace the connection if wires are broken.

Note:
Only operate the vehicle with an intact, connected battery.

5.2 Fuses

Attention!

Fire hazard and risk of serious damage to electrical components!
Never use fuses with a higher current rating than the one specified.
Never bypass the fuses or mend the fuses.

Specified fuses

Main fuse	light blue Fuse cartridge FKS-15 A
Fan fuse	brown Fuse cartridge FKS-7.5 A
Indicator fuse	purple

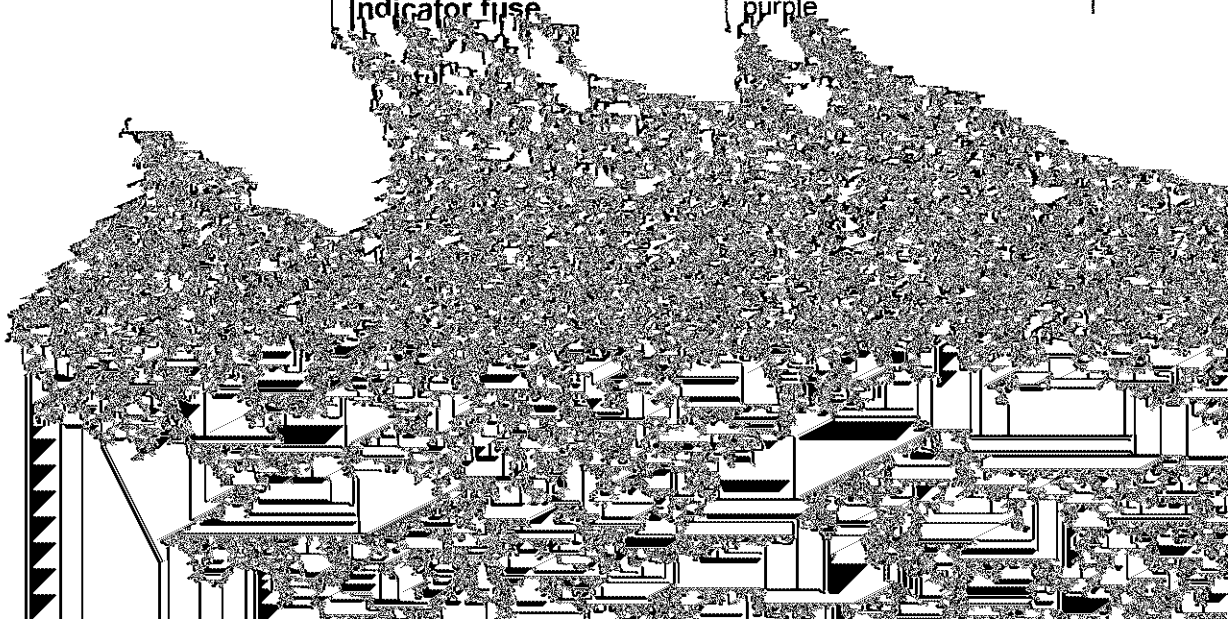

5.3 Battery

DANGER!

Risk of acid burns!
Always wear protective goggles and gloves when working with battery acid.
Electrolyte (battery acid) is highly acidic. It must never come into contact with eyes, skin or clothing!
Immediately wash affected areas of skin thoroughly with water and see a doctor!

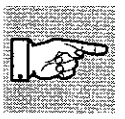

Note:
Always follow the manufacturer's instructions when working with the battery!

Performance data:

Nominal voltage:	12 V
Nominal capacity:	9 Ah

The battery is located beyond left side panel.
In the series production models, lead batteries are used.
The battery connections must be kept clean and preserved with battery grease.

5.3.1 Checking the Electrolyte Level

The electrolyte level must be above the lead contacts in each cell by a few millimetres. Observe the markings. The level may not fall below the "MIN" mark!
Only demineralised or distilled water may be used to refill the battery.

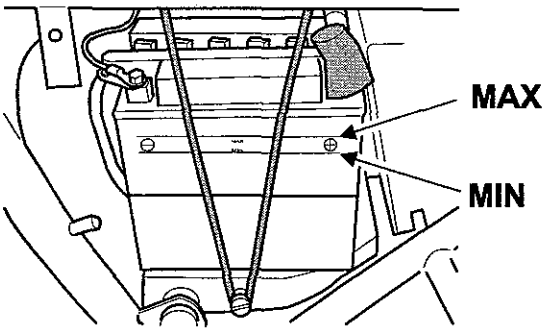

1. Remove seat.
2. Remove the left side panel.
3. Visually inspect whether the electrolyte level is between the "MIN" and "MAX" markings.

If the electrolyte level is too low:

1. Remove the plastic plug from the cells.
2. Add distilled or demineralised water to the removed battery up to the "MAX" mark.
3. Return plastic plug.
4. Return side panel and seat.

5.3.2 Replacing the Battery

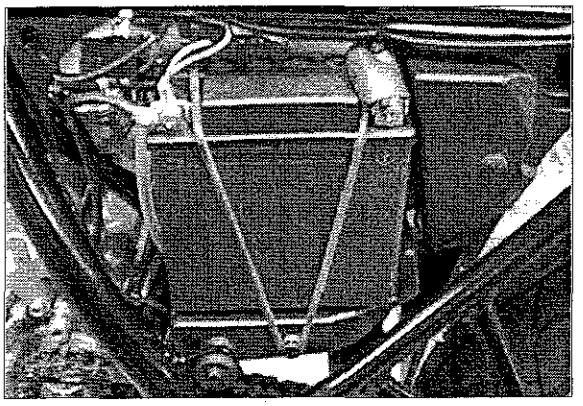

Removal

1. Switch off ignition.
2. Remove the seat and side panel.
3. Unscrew the cable from the negative pole.
4. Unscrew the cable from the positive pole.
5. Store the screw and spacer sleeve (battery with connections from the top) safely.
6. Remove the degassing hose.
7. Remove the retaining strap.
8. Remove the battery.
9. Inspect the cell rubber strip and retaining strap, replacing if necessary.
10. Clean the surface, if necessary.

Installation

Danger of short-circuits!

Incorrect polarity can destroy electronic components and the battery.

Be certain to connect the poles correctly.
During installation, always connect the positive pole first.

Note:

Install the cable with no kinks or chaffing points.
The battery connections must be clean with secure contacts.
Clean the connections with a brass brush and apply battery grease.
Make certain that the battery rests securely.
Install the degassing hose such that no acid can splash onto parts of the vehicle.
Replace a defective degassing hose.

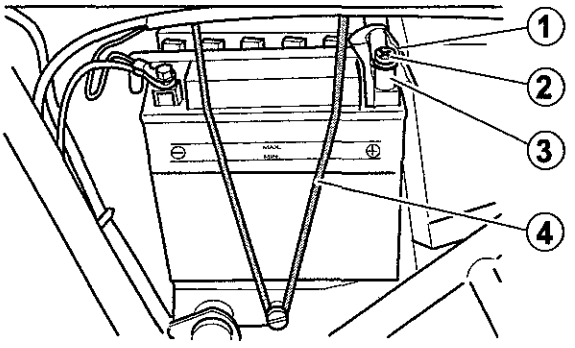

1. During battery change, position the bonding sheet on the front side (leave the level markings visible!).
2. Position the battery and fasten it with the retaining strap (4).
3. Screw the positive cable to the positive pole (connect from the top with M5x20 screw (2) and spacer sleeve (3)).
   Pull the starter relay from the mounting support, if necessary, in order to ease installation and return it after connection.
4. Replace the rubber cap (1).
5. Connect all earth cables to the negative pole.
6. Remove any blockages in the degassing opening and connect the degassing hose.
7. Return side panel and seat.

Note:

Always firmly tighten the connections to the poles.

5.3.3 Charging the Battery

Attention!

Risk of explosion!
Smoking and the use of fire and open lights is forbidden! Avoid the generation of sparks!
Ensure proper ventilation at the installation location!

Risk of destruction!
Charging the battery while installed and connected can lead to the destruction of electronic components and cause fires!
Disconnect and remove the battery!

Recharging of the battery is recommended at an open-circuit voltage of more than 12.4 V at the battery terminals.

Note:
Take heed of information provided by the battery manufacturer!

Remove the battery for recharging
(see 5.3.2 "Replacing the Battery").

1. Connect the charging cable with correct polarity.
2. Unscrew the plastic plug.
3. Check the electrolyte level, refill if necessary
   (see 5.3.1 "Checking the Electrolyte Level").
4. Switch on the charger.

The charging current should be **0.9 A** (= 10% of the nominal capacity) for normal charging.
Observe the charging technology specifications of the battery manufacturer.

5. Switch off charger.
6. Disconnect the charging cable.

At full capacity, the open-circuit voltage should be more than 12.8 V.

7. Check the electrolyte level
   (see 5.3.1 "Checking the Electrolyte Level").
8. Securely screw in the plug.
9. Install the battery
   (see 5.3.2 "Replacing the Battery").

5.4 Ignition

5.4.1 Block Circuit Diagrams

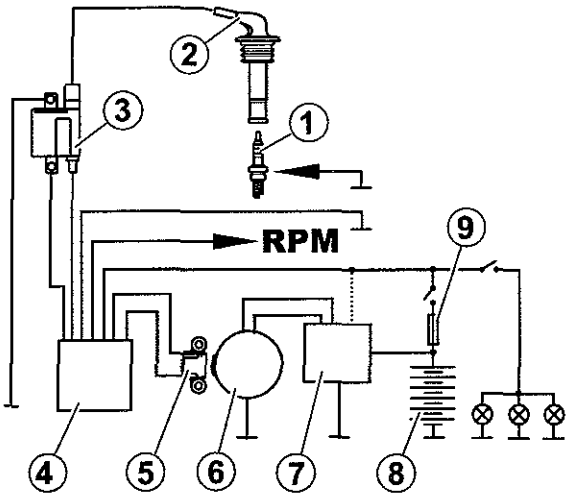

Version A

(1) Spark plug with connection nut (ISO terminal)
(2) Spark plug connector
(3) Ignition coil
(4) Ignition box, version A / version B (80 km/h)
(5) Sensor coil
(6) Alternator
(7) Controller (dash-lined connection not available for AET)! (starting from vehicle identification number SNZ1SXSM01H50104)
(8) Battery
(9) Fuse

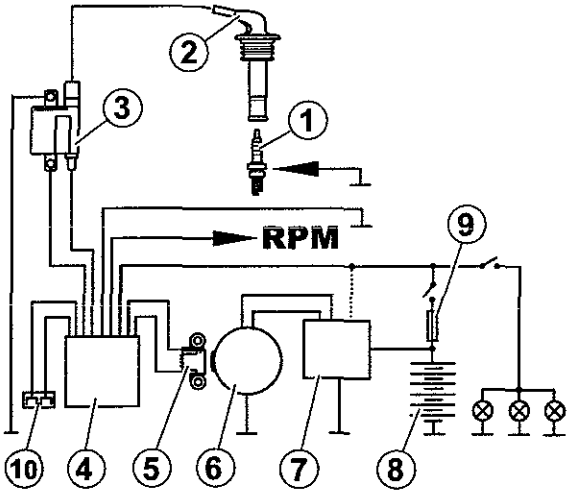

Version B (80 km/h variant)

(1) Spark plug with connection nut (ISO terminal)
(2) Spark plug connector
(3) Ignition coil
(4) Ignition box, version A / version B (80 km/h)
(5) Sensor coil
(6) Alternator
(7) Controller (dash-lined connection not available for AET)! (starting from vehicle identification number SNZ1SXSM01H50104)
(8) Battery
(9) Fuse
(10) Sensor for 80 km/h variant:

5.4.2 Spark Plug

Type: **NGK- CR 8 E**
Test spark distance: approx. **0.7 mm**

The spark plug influences the preparation for starting, the idling behaviour, acceleration, fuel consumption and the maximum speed of the vehicle.

Attention!

Risk of burns and danger from the high voltage!
Do not touch the spark plugs while the engine is still hot.
Never disconnect the spark plug cable to switch off the engine.

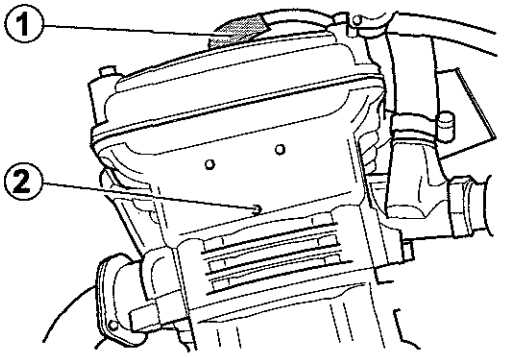

Replacing

1. Switch off ignition.
2. Remove the spark plug connector (1).
3. Puncture the dirty spark plug cavity discharge hole (2) with a wire.
   Any water in the spark plug cavity flows out.
4. Unscrew the spark plug using the spark plug spanner (with rubber insert) and a reversible screw driver.
5. Replace the spark plug.
6. Clean the gasket and unscrew the connection nut before installing the spark plug.
7. Screw on the spark plug using the spark plug spanner.
8. Connect the spark plug connector.

Tightening torque:

Spark plugs: 15^{+2} Nm

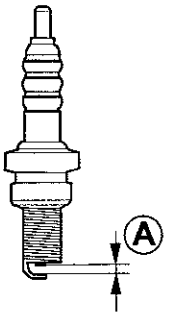

Inspection

1. Inspect the electrode. If the electrode is defective or corroded, replace the spark plug.
2. Clean the combustion residue from the electrode using a brass wire brush.
   The electrode must show no visible signs of burning out.
   The insulator foot must be greyish yellow to brown.
3. Check the spark plug air gap. **(A) = 0.7 mm**.
4. Adjust the spark plug air gap, if necessary.

Colour of the Electrode	Possible Causes/Faults
greyish yellow to brown	correct carburettor setting and correct spark plug use
black	air-fuel mixture too rich
light grey	air-fuel mixture too lean
oily/wet	Spark plug misfiring or poor seal on the piston rings

5.4.3 Spark Plug Connector with Ignition Cable

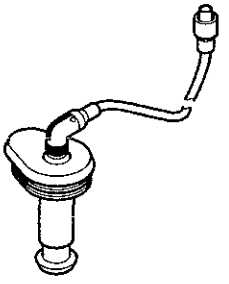

The spark plug connector and ignition cable form a unit. Correct functioning of the spark plug connector is only guaranteed when it is securely connected to the spark plug (with the connection nut screwed onto the connection screw). The ignition cable must be clean, dry and free of tears in the insulation.

Removal

1. Remove the spark plug connector from the spark plug.
2. Unscrew the ignition cable from the ignition coil.
3. Perform a visual inspection for exterior damage.
4. Inspect the continuity, if necessary.
5. Replace the defective component, if necessary.

Installation

Install in reverse order.

5.4.4 Ignition Coil

Hazard

Inspection

Measure the coil resistance.

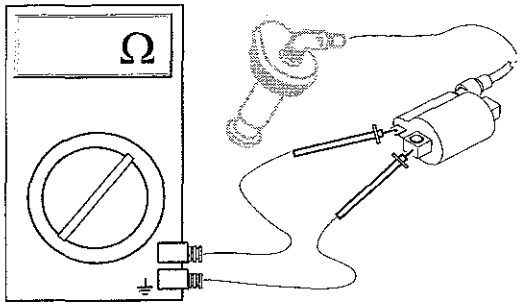

1. Primary coil resistance (supply - earth):
   - 0.79 Ω ± 15% at 20 °C.

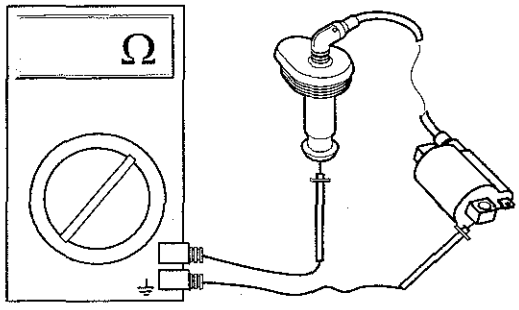

2. Secondary coil resistance (spark plug connector - earth):
   - 7.6 kΩ ± 20% at 20 °C.

5.4.5 Ignition Box

The ignition box is attached to the rear wheel mud guard beyond the seat.
The following designs are available:

- 16.754.126 open variant, series production unit
- 16.754.127 MZ 125 SM 80 km/h variant, only for Germany
- 16.754.134 MZ 125 SX 80 km/h variant, only for Germany

Refit sets with certification are available for a performance reduction to 80 km/h at a later date or an elimination of the reduction.

Removal

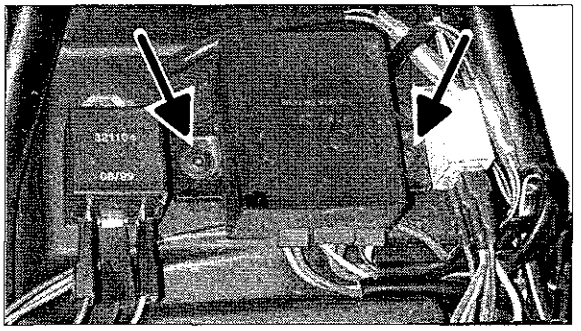

1. Remove seat.
2. Unscrew the two oval flange head screws.

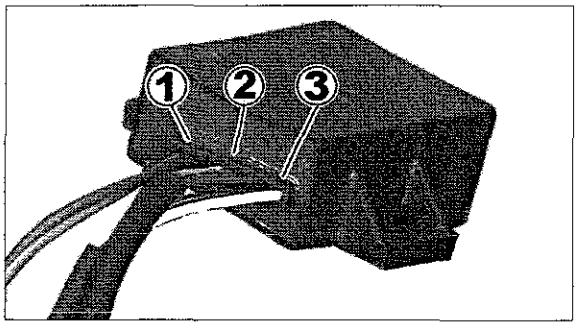

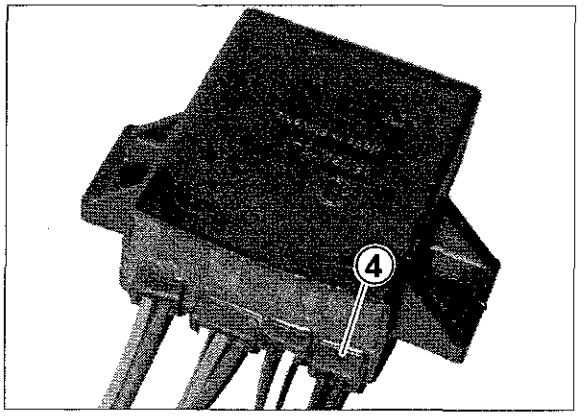

3. Remove connector (at end of cable, turned away from the ignition box):
   - connector (1), 2-pin,
     wires bk, wh to pick-up.
   - connector (2) 3-pin,
     wires br, wires br, chassis earth
     gn/rd to tachometer
     rs/wh to shut-off relay
   - connector (3), 2-pin
     wires br, ignition coil earth
     bl, ignition coil.

   80 km/h variant (only for Germany):
   - Disconnect the additional 2-pin cable (4) for wheel sensor

4. Cut cable binder, remove ignition box.

Installation

Install in reverse order.

5.4.6 Ignition Box Inspection

General information

The following scheme shows a simple method to check the functional condition of the ignition box. This inspection does not cover cable cut, contact corrosions and similar faults.

CDI box connection (in 3-pin Molex connector)
- cable green/red tachometer signal
- cable red/white positive pole
- cable brown: negative pole

Instrument cable positive pole	Instrument cable negative pole	resistance	CDI box
red/white	brown	over 0.5 Ω	o.k.
red/white	brown	0 or near 0 Ω	defective

Ignition box and 80 km/h variant sensor

In addition to the general inspection procedure, please observe the following instructions to check the ignition box of the 80 km/h variant:

Faults
The ignition box limits the speed to approx. 6500 rpm in each gear.

Possible causes:
- too much acceleration when starting (only in the 1st gear)
- dirty sensor with ferruginous residue
- too large space to the transmitter plate of the pulse ring
- defective cable or connector to the sensor
- Sensor - ignition box connector not plugged
- Fraudulent sensor fixing using ferruginous screws or rivets (in series production non-magnetic screws or rivets are used!).

5.4.7 Conversion to the 80 km/h Variant

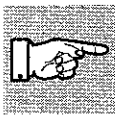

Note:
Conversion to the 80 km/h variant is only intended for Germany. Only the ignition box and retrofit set listed above may be used. After the conversion, the appropriate modifications to the vehicle documents must be made by the competent certification institute in accordance with the certification! The same applies for the removal of the speed limitation.

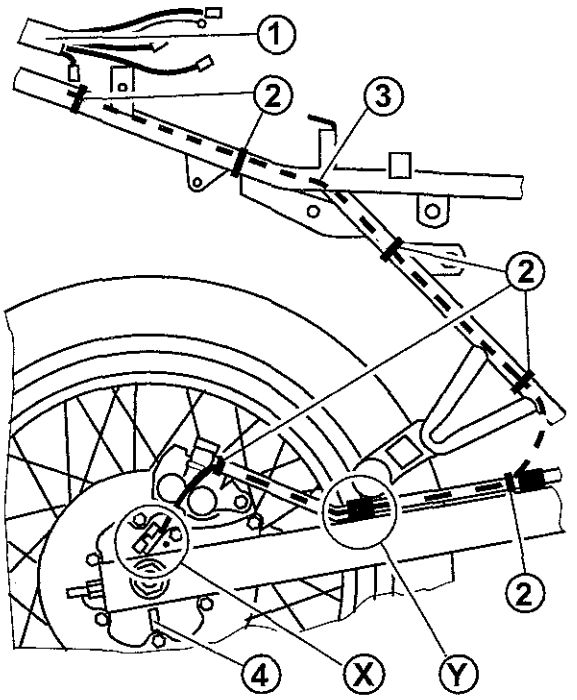

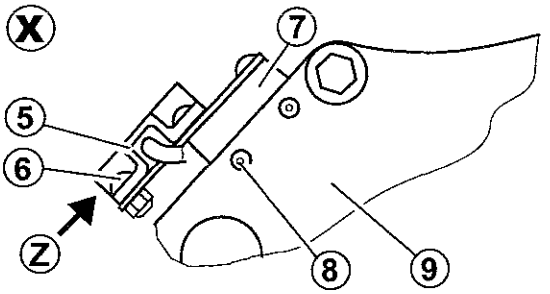

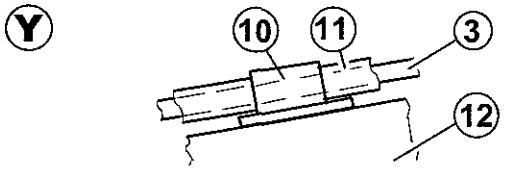

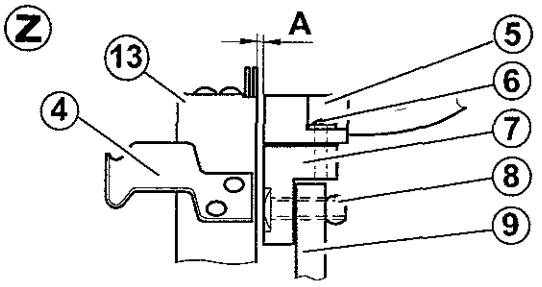

The retrofit set includes the ignition box, the manufactured sensor (sensor, cable, plug connector) and all mounting elements.

1. Properly secure the vehicle on the installation stand.
2. Remove seat.
3. Remove the ignition box for the non-performance reduced variant.
4. Open the retrofit set, check for completeness based on the enclosed information.
5. Install the ignition box (1) for the performance reduced variant.
6. Remove the rear wheel (see 4.4 "Rear Wheel").
7. Attach the PVC sensor support angle (7) to the adapter plate (9) with blind rivets (8) from the wheel side.
8. Screw the sensor (5) onto the sensor support angle (7) at the lowest position using the EJOT PT screws(6) (non-magnetic) with the cable end toward the outside.
9. Run the cable upward to the brake line.
10. Attach the cable at the end of the brake line using the RAP cable binder (2).
11. Run the cable on the wheel side alongside the brake line.
12. Run the cable (3) and brake line (11) through together.
13. Attach the cable behind the front shell with the RAP cable binder (2).
14. With fully extended shock absorber, run the cable in a slight curve to the inside of the frame and attach it with the RAP cable binder (2).
15. Run the cable on the inside of the frame to the ignition box (1) and attach it according to the diagram.
16. Establish the electrical contact via the plug connector.
17. Install the seat.
18. Tigthly plug the pulse ring (4) into the wheel hub.
19. Mount the rear wheel (see 4.4 "Rear Wheel").
20. Adjust the distance **A = 1.5...2.5 mm** between the transmitter plate of the pulse ring (4) and the sensor (8).
21. The authorized dealers must confirm the proper installation for certification.

If the sensor does not function properly, make certain to clean off the brake disk residue!
Be certain to check the grooves for the mounting screws and daub them off.

5.4.8 Regulator/Rectifier

The regulator/rectifier is attached to the underside of the intake muffler and accessible from the right side of the vehicle.

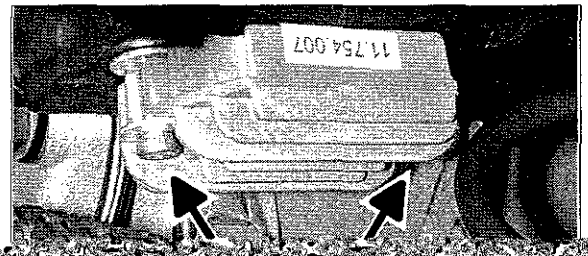

Performance Data:

Controller voltage:	14.3 +/- 0.5 V (14.5 +/- 0.5 V at controller SH626-12, used up to vehicle identification number SNZ1SXSM01H501040)
Protection level:	IP 67
Standby current:	less than 1 mA/2.6 V

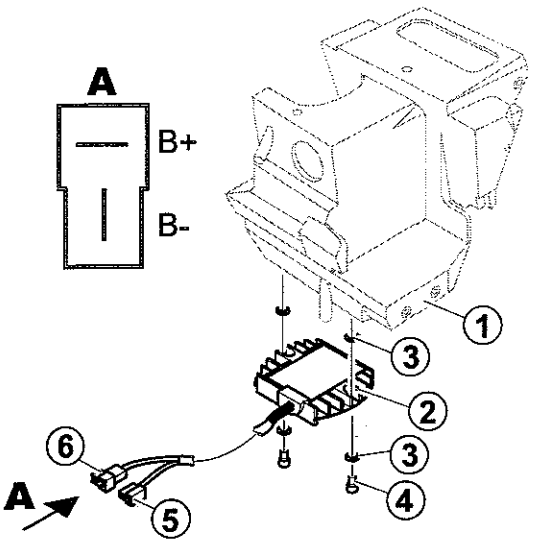

Replacing

1. Remove the seat and fuel tank.
2. Disconnect the plug connector (5) from the alternator cable and the plug connector (6) on the battery cable, open the cable binder.
3. Unscrew the two screws (4) on the underside of the intake muffler (1), remove the regulator/rectifier (2) and the four spacers (3).

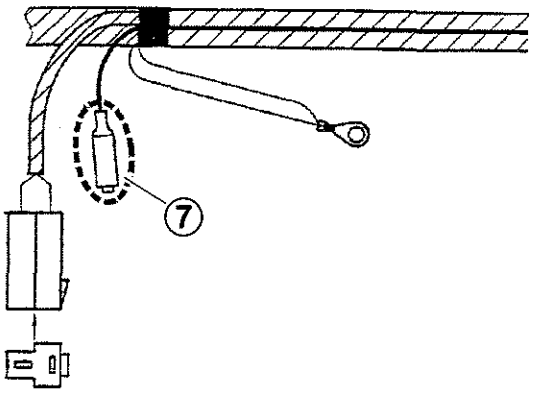

4. Screw on the new regulator/rectifier.
   The spacer plate is not necessary, if the controller starting from vehicle identification number SNZ1SXSM01H501041 is used instead the "SH626-12".
   Please also note:
   - Cut off the tubular terminal (7) on the cable harness.
   - Kink the red/black 0.75 cable, isolate it with a shrinkage hose and attach with a cable binder to the cable harness.
5. Run the cable upward between the frame and the intake muffler and connect the plug (6) to the jack on the battery cable, insert the plug from the alternator cable into the jack (5), making certain that good contact is made.
6. Attach the cable to the frame using cable binders.
   Do not run the cable in front of the intake opening of the intake muffler.
7. Install the seat and fuel tank.

Tightening torque:

Regulator/rectifier screws:	maximum 4^{+1} Nm

5.5 Alternator

The alternator is located under the left side engine cover.

(1) Stator
(2) Rotor

5.5.2 Rotor

Attention!

Danger of crushing!
Be aware of the magnet strength.
Do not let go of the cover near the rotor.

Removal

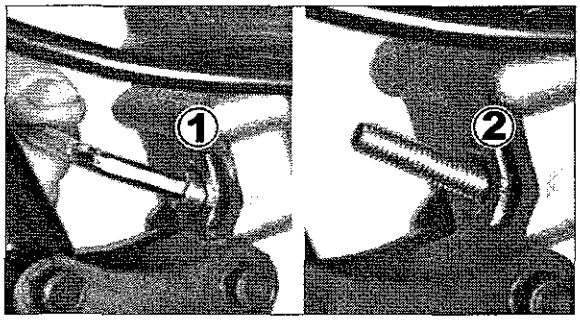

1. Unscrew the five alternator cover screws, remove the cover with the stator.
2. Turn the crankshaft to the top dead point (see 6.7.1 "Removal").
3. Unscrew the holding screw (1) for the locking screw and ring seal.
4. Screw in the locking screw (2) and screw it into the bulge in the cam shaft.

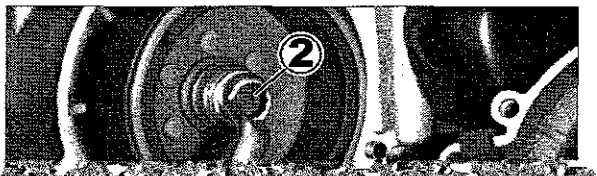

5. Remove the screw (2), washer and sensor (pick up) (1).

Installation

Attention!

Possible damage to the sliding bearing!
Do not pound too hard on the crankshaft/curved washer when removing the curved washer.

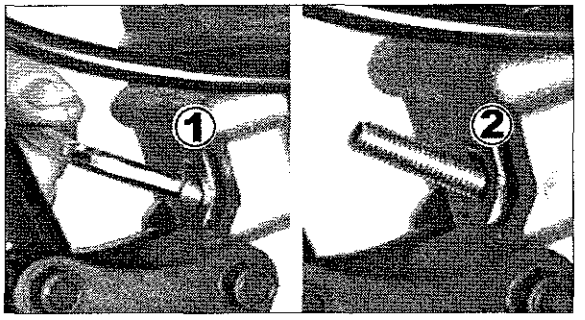

1. To install the rotor and adjust the sensor, lock the crankshaft with the locking screw (2) in the top dead centre.
2. Insert curved washer.
3. Lubricate the cone of the crankshaft and the cone of the rotor well with brake cleaner.

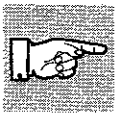

Note:
No brake cleaner may come into contact with the rotary shaft seal!

4. Position the rotor such that the curved washer nut and the curved washer slide into each other.
5. Screw on the rotor with the microencapsulated screw and washer.

Sensor adjustment with the sensor adjustment tool

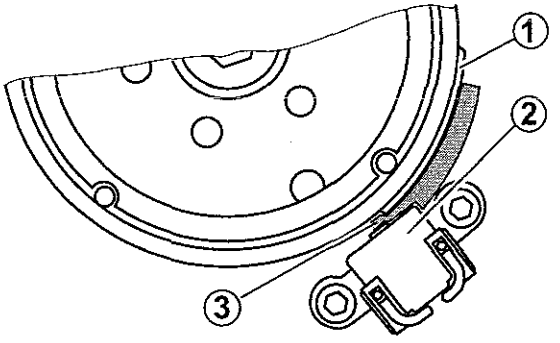

1. Temporarily fasten the sensor (2) with two screws.
2. Insert the sensor adjustment tool (3) between the sensor and the break-away plate (1) of the rotor.
3. Lightly place the sensor on the sensor adjustment tool and screw it tight. This sets the distance between the sensor and the rotor to **0.5 ± 0.1 mm**.
4. Remove the sensor adjustment tool.
5. Install the alternator cover with stator.
6. Remove the locking screw and plug the hole.

Sensor adjustment without the sensor adjustment tool

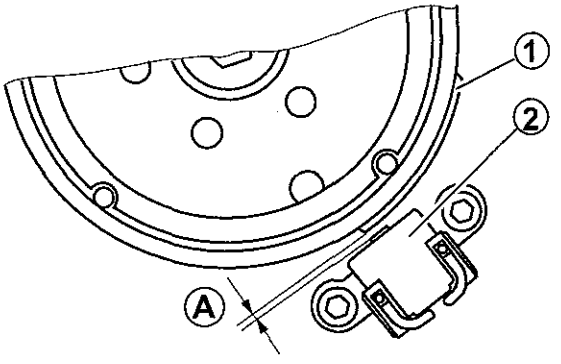

1. Remove the locking screw and plug the hole.
2. Temporarily fasten the sensor (2) with two screws.
3. Turn the front edge of the break away plate (1) over the sensor.
4. Adjust the distance **(A) = 0.5 ± 0.1 mm** using a thickness gauge.
5. Screw the sensor in tight.
6. Install the alternator cover with stator.

Tightening torque:

Rotor screw:	26^{+4} Nm

5.6 Flasher Relay

The flasher relay is attached to the rear wheel mud guard beyond the seat.

Removal

1. Remove the seat.

5.8 Shut-off Relay

The shut-off relay is attached to the rear wheel mud guard beyond the seat.

Function

The shut-off relay interrupts the ignition circuit when the gear is engage with extended side stand.
The activation of the starter is also blocked.

Note:

If the engine can be started while the vehicle is in gear and the side stand is extended or if the engine continues to run, then:

- the shut-off relay or
- the diode 31 (see circuit diagram) or
- the side stand switch or
- the neutral gear switch are defective.

Removal

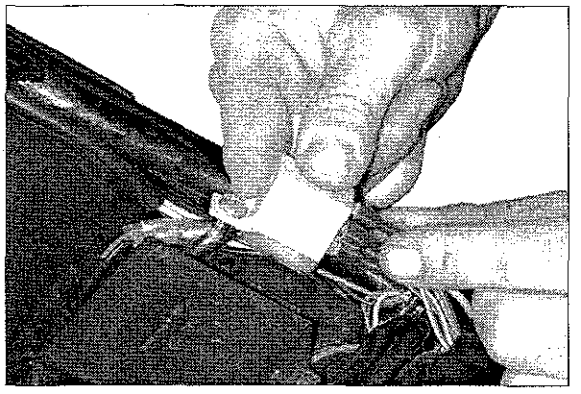

1. Note the slot allocation.
2. Remove the seat.
3. Unscrew the screw.
4. Remove the four cables.

Installation

Install in reverse order.

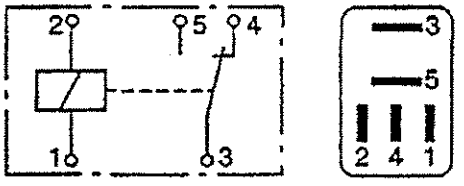

Slot allocation:

(1) green 0.75
(2) red/black 0.75
(3) red/black 0.75
(4) ---
(5) twice red / white 0.75

5.9 Thermal Switch

The thermal switch is bolted to connection piece on the left rear of the cylinder head cooling system.

Removal

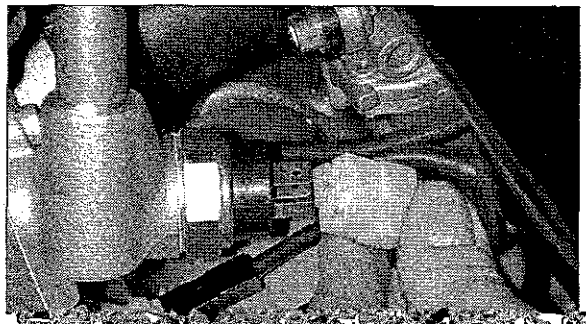

1. Remove the lower clamp shell on the radiator, remove the radiator hose and drain the coolant into a suitable container.
2. Remove the rubber sleeve, remove the plug contact.
3. Carefully unscrew the thermal switch with wrench, size 29. Be careful not to damage the oil pressure switch.

Inspection

To test the thermal switch, switch points must be triggered with controlled heating.

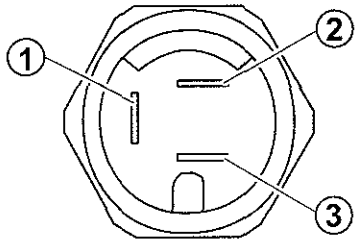

Installation

Install in reverse order.

(1)	bk	positive pole
(2)	orange	Temperature pilot lamp
(3)	bk/gn	Fan

Add water, add anti-freeze if necessary.

5.10 Horn

The horn is attached to the front part of the frame.
It is designed as an electromagnetic striking horn.

Removal

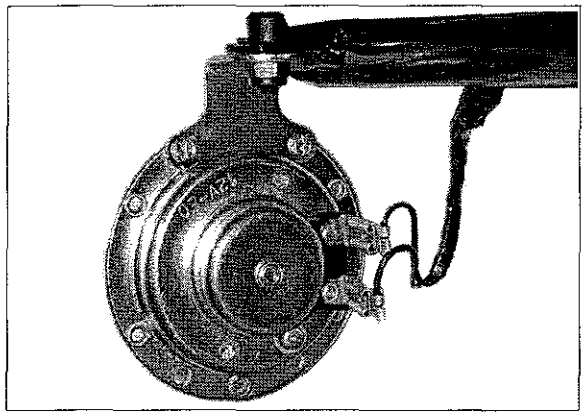

1. Carefully remove the plug contact using a pliers.
2. Unscrew the hexagon nuts and remove the horn.

Installation

Install in reverse order.

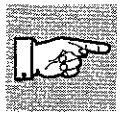

Note:

The horn must not be in contact with the fuel tank!
It is attached to the right side of the steering head pipe on the bottom of the clamp shell.

5.11 Starter

The starter is mounted on the left side of the crankcase.
Its drive pinion catches in the right crankcase.

The starter is replaced as a unit and should not be further dismantled.

Inspection

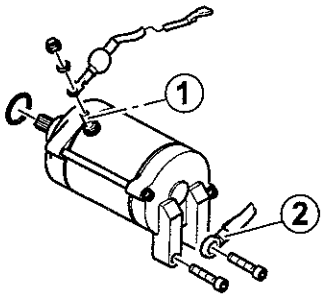

A battery in good working condition is the prerequisite for the following tests. To prevent damage to electrical components (starter button, starter relay, supply), first test the voltage at the starter cable terminals.

1. Connect the voltmeter in parallel with the positive cable (1) and earth cable terminal (2).
2. Press starter button.
3. Measure voltage.
   - If a voltage (12 - 14 V) is detected on the positive cable

5.12 Fan

The fan is bolted to the rear side of the right-hand radiator.

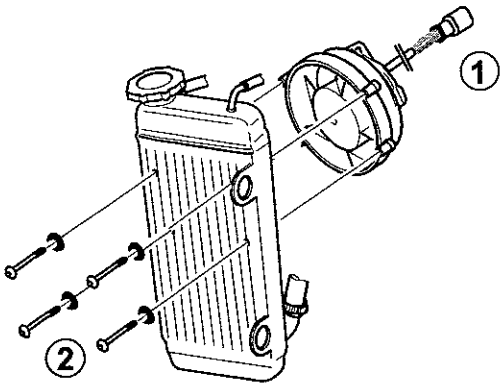

Removal

1. Disconnect the fan power supply from the cable harness at the plug (1).
2. Unscrew the four screws (2).
3. Remover the fan.

Inspection

5.13 Diodes

5.13.1 Position and function

Diodes are mounted on four positions of the cable harness. They fulfil the following task:

Diode	No in circuit diagram	Function
D1	30	This blocks the speedometer illumination when the parking light is on (handlebar lock).
D2	31	prevents the ignition, that is the start of the engine, when the side stand is extented and the gear is enganged at the same time. This makes it impossible to ride off when the stand is extended.
D3	32	In the starter circuit.
D4	34	Prevents voltage spikes in the electrical installation when the horn is used.

5.13.2 Test Diodes

Two types of faults are possible in the built-in diodes:
- Diode in short-circuit, diode is conductive in both directions.
- Diode in idle condition; diode blocks

		Fault exposure		Test/test medium	Remedy
Diode	**No in circuit diagram**	**Diode in short-circuit**	**Diode in idle condition**	**Continuity tester**	
D1	30	The speedometer illumination lights when the parking light is on. If the light switch is in parking light or full light position, the electrical installation is in operation without ignition lock being switched on.	The parking light, the tail light and the instrument illumination light when the ignition and the parking light are switched on.	Remove the connector, connect the continuity tester test and turn the measurement tip: There must be a passage from one side only.	Replace the cable harness with a new one.
D2	31	A gear is engaged, side stand is folded in: Neutral gear pilot lamp lights.	Side stand extended, neutral gear engaged: No ignition, impossible to start the engine.		
D3	32	Possibly break of the 15A fuse	No impact on function, but the protection function is disabled.		
D4	34	Possibly break of the 15A fuse	No impact on function, but the protection function is disabled.		

6 Engine

6.1 General Information

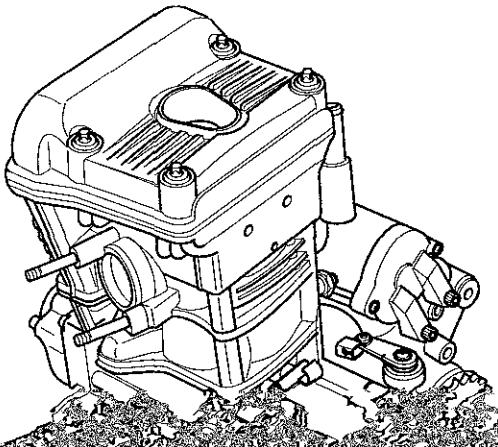

Before individual components of the disassembled engine can be inspected for continued usability, they must first be cleaned thoroughly.
To prevent damage to the engine paint, no aggressive cleaning agents may be used. Typical engine cleaner is recommended.
The cleaning rags used must be free of loose fibres. Textile fibres can clog lubrication openings.
Wear on components can be recognised by abrasion marks or crack formation. If excessive wear marks are discovered, the cause must be located and remedied. If the cause is not remedied, the same damage will occur to newly installed components after a short time!

If the compression pressure is below the minimum permissible value:

1. Add a few drops of motor oil to the cylinder.
2. Repeat measurement.

Compression pressure	Diagnosis
Higher than without oil	Piston worn out or damaged
Same	Piston ring(s), valves, cylinder head seal or piston may be defective, poor seal on valve
Over the maximum pressure	Check the cylinder head, valve surface or piston head for combustion residue.

6.2.2 Oil Level

Check the oil level while the engine is cold.

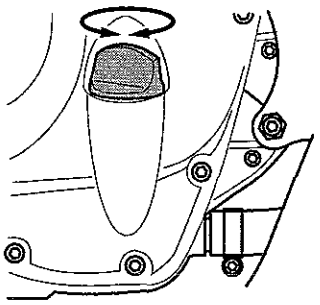

1. Position the vehicle vertical on a flat, horizontal surface. A slight incline (approx. 5° or more) results in an inaccurate reading.
2. Unscrew the oil cap with oil dipstick from the oil filler neck and wipe off the dipstick.
3. Re-insert, then unscrew the cap again and check the oil level on the dipstick.
   The oil level must be between the MIN and MAX markings.
4. Add oil, if necessary, but never more than the maximum!

Note:
If the oil level is at MIN, up to 200 cm^3 (0.2 l) of oil may be added.

6.2.3 Oil Change

Environment!

Discharged motor oil can contaminate ground water and soil.
No oil may enter the sewer system or the soil. Immediately collect discharged oil and dispose of it properly. Old oil must be collected in suitable containers until it is properly disposed of.

Oil types to be used (usable year-round):
- SAE 15 W-50 API SG/SH
- SAE 10 W -40 API SG/SH

Oil volumes

Oil volume after dismantling the engine:	1.2 l
Oil change with filter change:	1.2 l

Change

The oil should be changed according to the intervals listed in the maintenance plan.

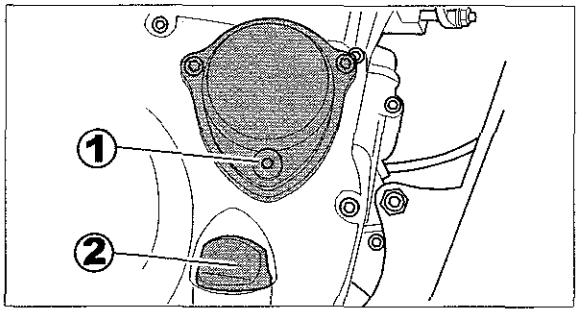

1. Allow the engine to run until it (and the oil) is warm.
2. Position the vehicle vertically on a flat, horizontal surface.
3. Position a suitable oil collector under the engine.
4. Loosen the oil return plug (1) and pull it out as far as the stop.
5. Unscrew the oil filler plug (2).

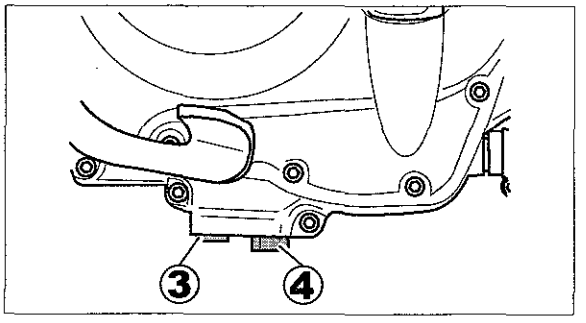

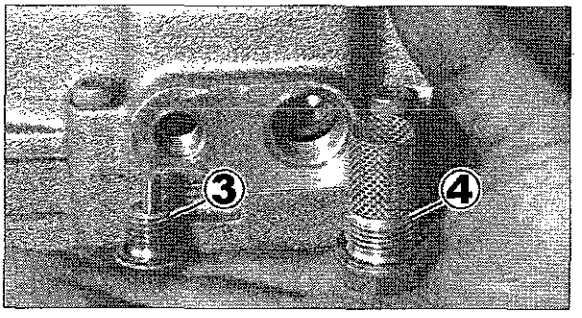

6. Unscrew the oil drain plug (3).
7. Unscrew the screw plug together with the oil screen (4), handling the seal carefully!
8. Let the oil drain out completely.
9. Unscrew the 2 screws of the oil filter cap.
10. Remove the oil filter.
11. Soak the new filter and O-ring in oil, then insert it, renew the seal and screw the cap on tightly.
12. Clean the coarse screen of the screw plugs and the magnet of the oil drain plug.
13. Screw in the oil drain plug (3) and the screw plug with the coarse screen (4) and tighten.
14. Add 1.2 l of oil to the engine and screw in the oil filler plug.
15. Check oil level (see 6.2.2 "Oil Level").

6.2.4 Oil Filter

The oil filter is changed with every oil change.

Note:
If the oil filter is not changed in accordance with the specified intervals, the filter paper may become clogged. The oil flow will be obstructed. Engine damage is possible, as only the emergency oil supply is active.

Removal

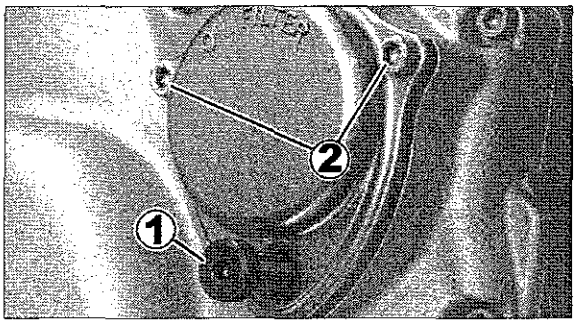

1. Position a suitable container under the vehicle.
2. Open the oil return plug (1) and let the oil drain out of the oil filter cavity.
3. Unscrew the 2 cylinder screws (2), remove the cap and seal.
4. Pull out the oil filter.

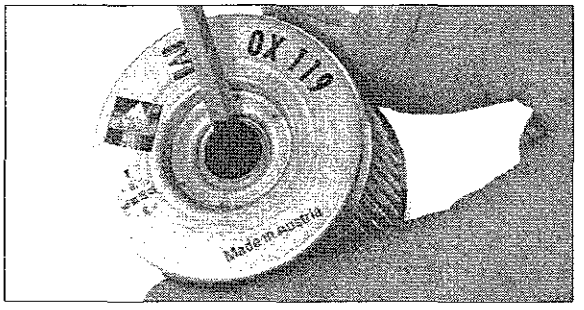

The oil filter has a bypass opening in the centre of the filter. This bypass opening guarantees an emergency oil supply to the engine, even when the oil filter is dirty.
The opening pressure of the bypass opening is 1.4 ± 0.2 bar.

Installation

1. Spread oil on the seat for the seal ring on the inside of the filter.
2. Soak the filter paper lightly in oil.
   Improvement in the oil flow after the oil filter change.
3. Place the filter on the seat on the clutch cover, install the oil filter cover with seal.
4. Check the oil level.
5. Test run the engine at idling speed only until the oil pressure has returned to normal.

Note:
Possible engine damage!
Never run the engine faster than idling speed during test running.

6.2.5 Oil Return Plug

Removal

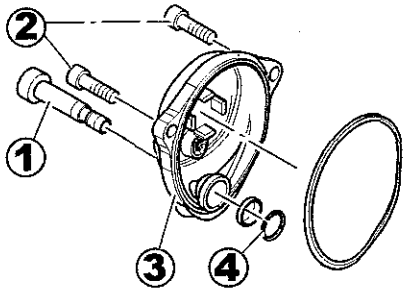

1. Open the oil return plug (1),
   let the oil drain from the oil filter cavity in the clutch cavity.
2. Unscrew the 2 cylinder screws(2), remove cap (3) with seal ring.
3. Remove the retaining ring (4) with a spreading pliers.
   Remove the oil return plug from the cap.

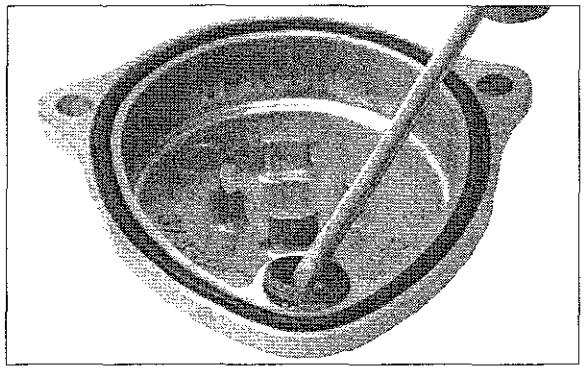

4. Remove the shaft seal from the cap.

Installation

1. Press in the shaft seal with your thumbs, lips facing inward (toward oil filter).
2. Press the oil return plug into the hole.
   The plug must not damage the shaft seal.
3. Insert the retaining ring into the nut of the oil return plug.
4. Fasten the cap with two cylinder screws.

6.2.6 Oil Pressure Sensor

Type:	Bosch 0344101090
Switch pressure:	0.5-0.8 bar

Inspection

The oil pressure sensor monitors the oil pressure. If there is no oil pressure (e.g. insufficient motor oil, damage to the oil circuit, engine not in operation), the indicator lamp lights.
If it is determined that no fault exists in the oil circulation, then:

- Cable broken, lamp does not light when switched on.
  Check the cable and lamp.
- Oil pressure sensor defective, replace the oil pressure sensor.

Change

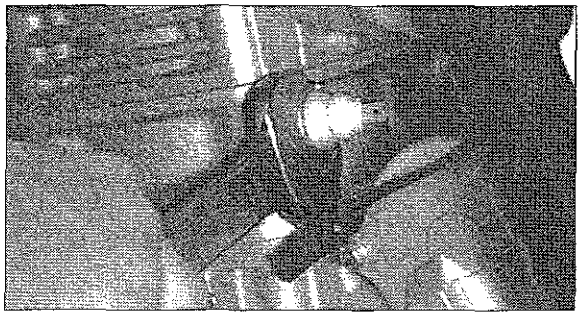

1. Remove the cable.
2. Unscrew the switch, remove with seal ring.
3. Use a new seal ring for installation.

Tightening torque:

Oil pressure sensor: 10^{+2} Nm

6.2.7 Checking the Oil Pressure

The external oil pressure check for diagnosis purposes is performed with the engine at operating temperature.

1. Remove the oil pressure sensor.
2. Screw in the pressure gauge.
3. Start the engine.

Oil pressure at idling speed (1800 rpm):	minimum 0.7 bar
Oil pressure at nominal speed (9500 rpm):	minimum 2.2 bar

6.3 Engine Removal

Attention!

Dirt and other foreign materials cause faults and defects when they are present in the engine.
The engine must be thoroughly cleaned before it is removed and dismantled.

1. Position the vehicle on the installation stand and secure it with tension belts.
2. Switch off the ignition, disconnect the battery terminals.
3. Drain the fluid into a suitable container.
4. Drain the motor oil into a suitable container (see 6.2.3 "Oil Change").
5. Disconnect the clutch bowden cable.
6. Remove the spark plug connector.
7. Completely remove the exhaust system (see 3.16 "Muffler").
8. Remove the cable from the thermal switch.
9. Open the carburettor hose clamp of the air intake fitting, remove the air intake fitting from the intake manifold.
10. Remove the radiator hose from the intake manifold.
11. Protect the stud bolts near the exhaust so that the frame is not scratched.
12. Remove pinion cover.
13. Open the secondary chain on the chain joint, remove (see 4.5 "Chain").
14. Remove gearshift lever.
15. Remove the starter and unscrew the cable.
16. Remove the seat, disconnect the sensor cable pull it out near the frame and intake muffler.
17. Disconnect the cable from the idling switch.
18. Disconnect the alternator-rectifier cable (yellow).
19. Remove the engine ventilation hose.

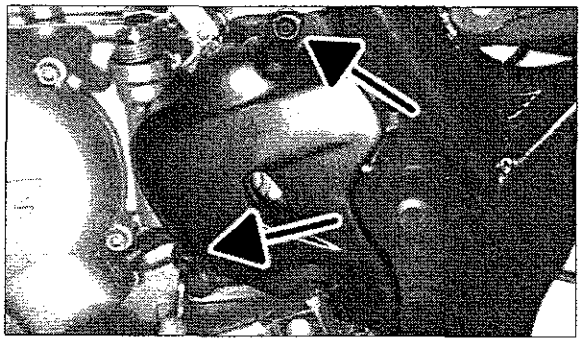

20. Unscrew the 2 cylinder screws on the front engine support plate while holding the nuts still.
21. Pull out the cylinder screws.

6.4 Clutch

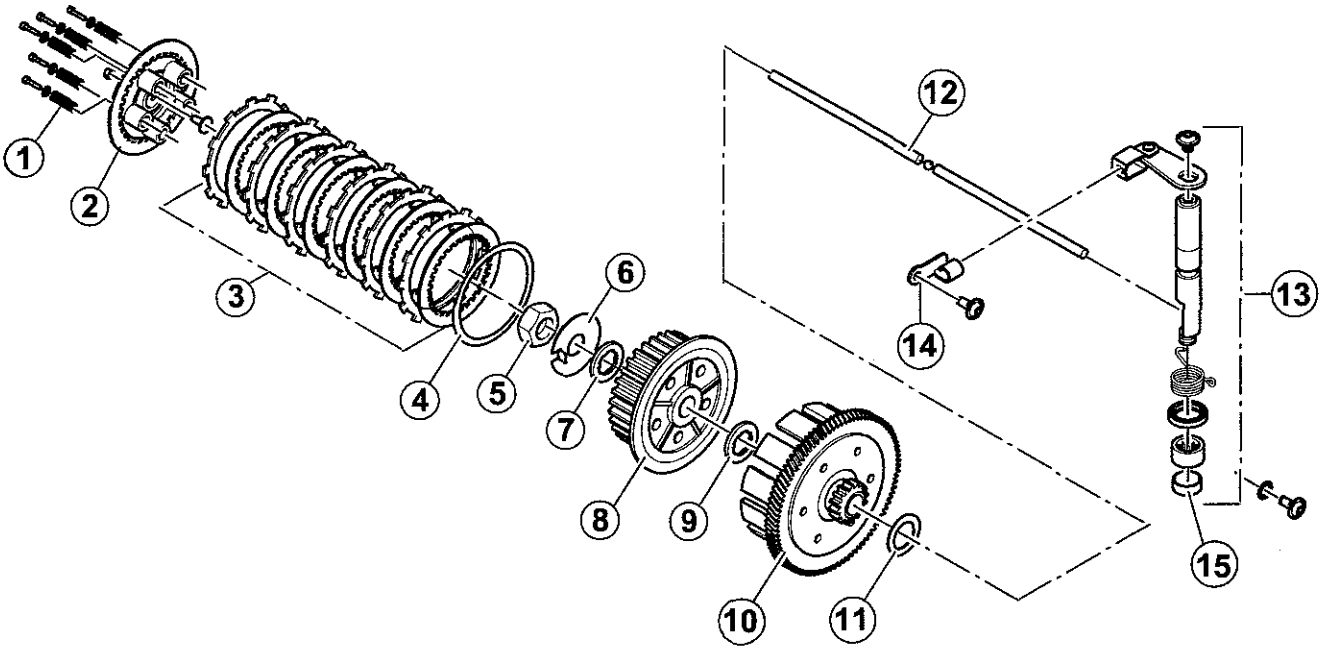

(1) Spring, 5x
(2) Pressure plate with threaded insert
(3) Plate packet
(4) Disc spring
(5) M12x1 nut
(6) Locking plate
(7) Washer, clutch
(8) Dog
(9) Washer, clutch
(10) Clutch basket
(11) Thrust washer 28x18x0.08 (or 0.90, 1.00, 1.10, 1.20 mm)
(12) Pressure rod with ball
(13) Clutch activation lever
(14) Clutch cable counter bearing
(15) Sliding bearing

6.4.1 Adjustment

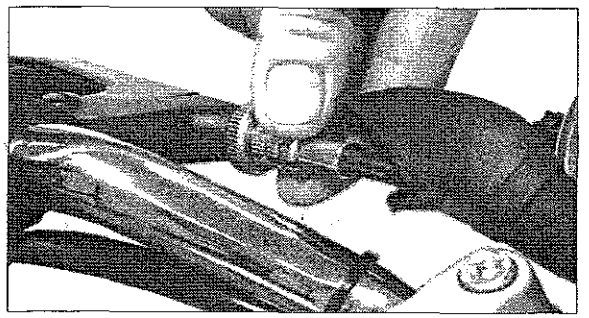

The bowden cable play is adjusted at the clutch lever.
It is measured at the end of the clutch lever and should be **3 - 5 mm**.

1. Push back the rubber cap.
2. Loosen the lock nut.
3. Screw the adjusting screw inward or outward as required.
4. Hold the adjusting screw, tighten lock nut.
5. Push on the rubber cap.

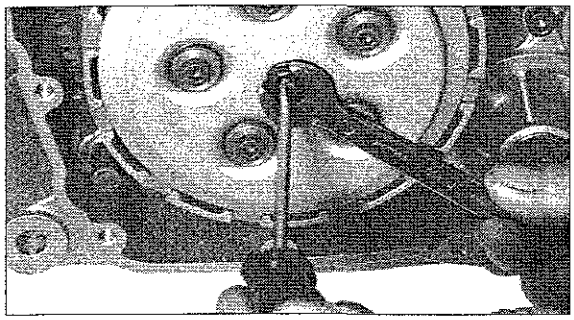

The basic adjustment is performed at the clutch basket.

6.4.2 Clutch Activation Lever

Removal

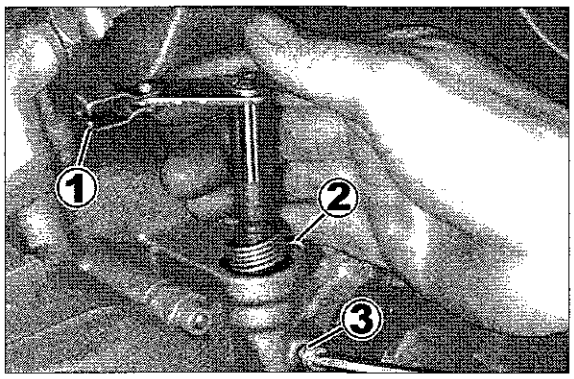

1. Remove starter (see 5.11 "Starter").
2. Remove pinion cover.
3. Disconnect the bowden cable at the counter bearing and clutch activation lever (1) on the engine.
4. Remove the pull-back spring (2).
5. Unscrew the screw (3) for the clutch activation lever.
6. Pull the shaft completely out of the housing, remove spring.

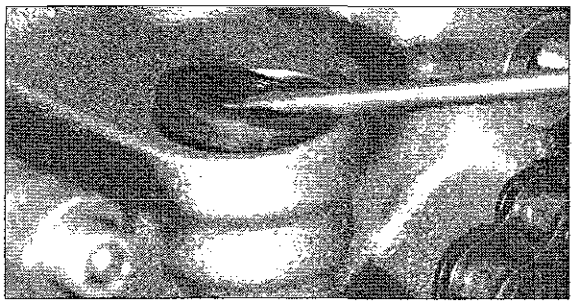

7. Remove the shaft seal ring and needle bush and replace if necessary.
   The shaft seal ring is destroyed by removing it!

Note:

The sliding bearing for the shaft of the clutch activation lever can only be replaced on a dismantled engine.

Installation

6.4.3 Removing the Clutch

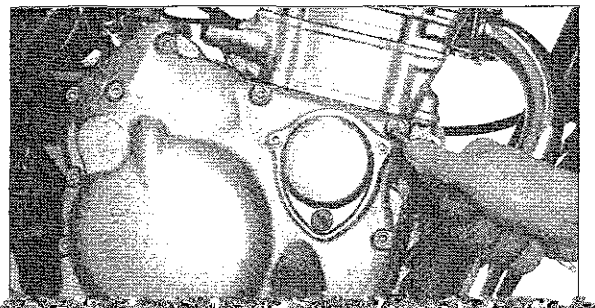

1. Allow the engine to run until it is warm.
2. Position the vehicle vertically on a flat, horizontal surface. Position a suitable container under the engine.
3. Open the oil drain plug under the engine. Drain the oil.
4. Unscrew the 13 cylinder screws, remove crankcase cover with seal.

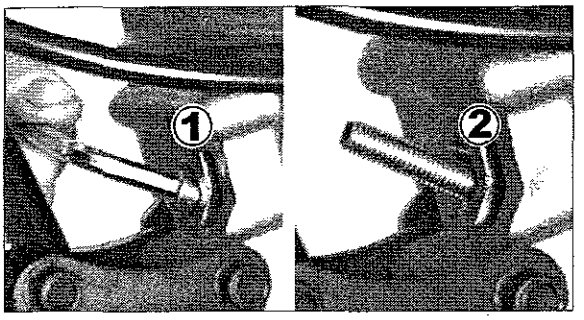

11. Unscrew the valve cap and set the crankshaft to the top dead point (see 6.7 "Cylinder Head").
12. Unscrew the cylinder screw (1), insert the crankshaft locking bolt (2) (ST 1).

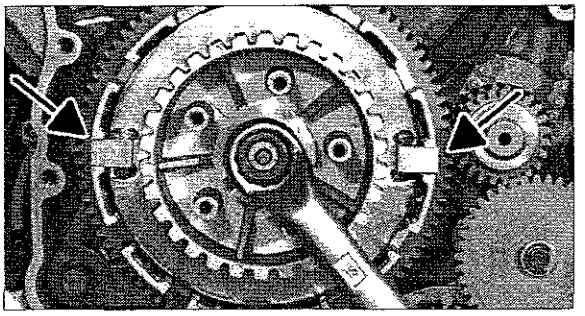

13. Slide the clutch locking tool (ST 5) onto the dog. Insert the bolts of the locking tool into the grooves of the clutch basket.
14. Unscrew the nut.
15. Remove the clutch locking tool.
16. Remove the locking washer and the first washer for the clutch, also remove the dog and second washer for the clutch.

Note:

The nut that holds the pump drive gear against the crankshaft has **left-handed threading**.

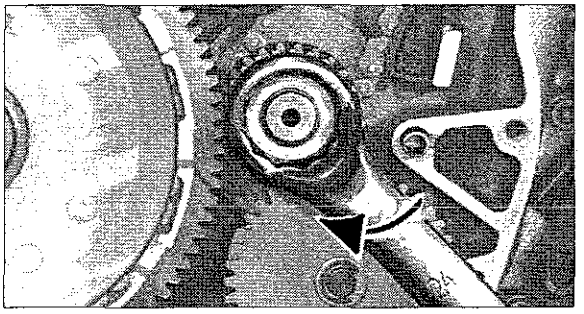

17. Unscrew the nut for the pump drive gear. **Left-handed threading**!

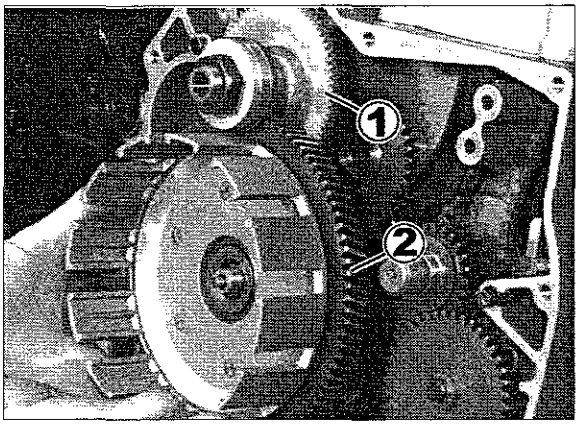

18. Remove the shock absorber (1) and clutch basket (2) at the same time.

Note:

The spacer and thrust washers behind the clutch basket may stick together. Loss possible!
The shock absorber is a complete component. It cannot and may not be disassembled by unauthorised personnel!

Inspection

Inspect and measure the following components. Replace defective or worn out components.

Compression spring:

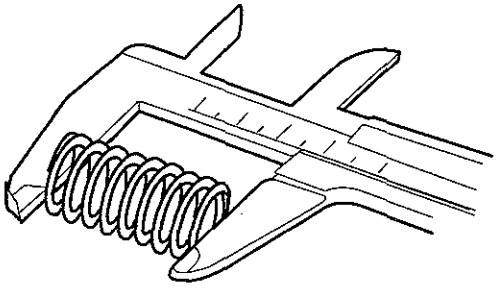

Measure the length of the compression springs.

Unstressed:	38.5 mm
Wear limit:	37.7 mm

Always replace the compression springs as a set.

Lining plates:

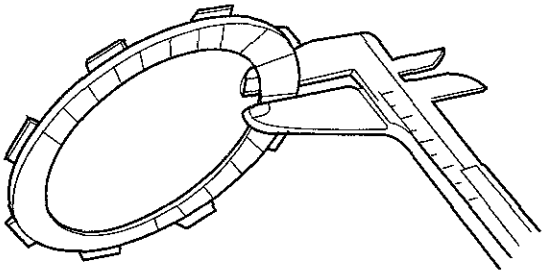

Measure the thickness of the lining plates at four locations.

New:	3 ± 0.05 mm
Wear limit:	2.7 mm

Replace worn or burnt-out clutch plates.
Always replace clutch plates as a set.

Inner plates:

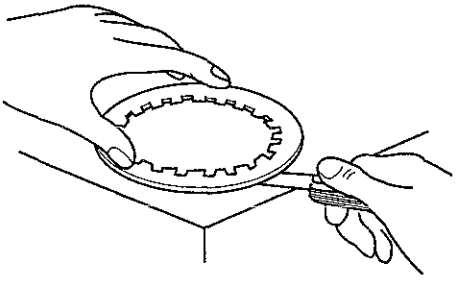

Check the inner plates for warping and bending.
Place them on a flat surface and check with a thickness gauge.

Thickness:	1.5 ± 0.05 mm
Wear limit:	1.3 mm

Always replace the inner plates as a set.

Clutch basket:

Attention!

Always replace the clutch basket completely together with the drive gear (primary drive).

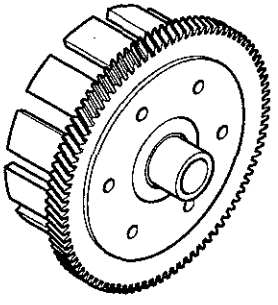

Check the clutch gear for wear, damage and pit formation.
Inspect the riveted joint.
Check the clutch basket for pressure marks.

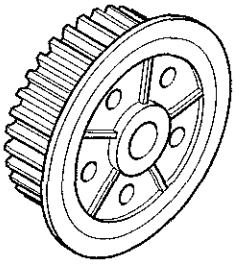

Dog:

Check the inner plate guide grooves for wear and damage, replace dog if necessary.

Bulges in the dog key grooves lead to jerky clutch operation.

Pressure rods:

The faces of the pressure rods must not exhibit "mushrooming" from the pressure of the ball.
Roll the pressure rods over a flat surface and check for deformation.

Wear limit:	maximum 0.5 mm

Shock absorber:

The shock absorber cannot be dismantled.
It is equipped with colour markings to protect against tampering.
Inspect the shock absorber for wear and damage, replace if necessary.

6.4.4 Installation

The crankshaft must be locked with the crankshaft locking bolt.

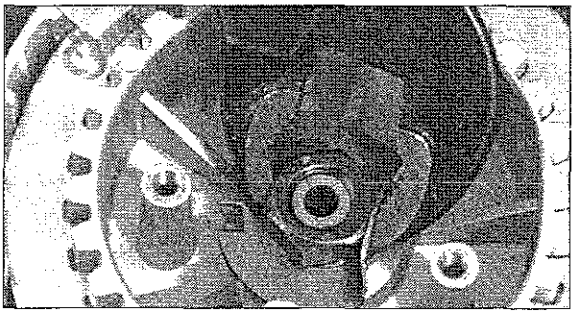

1. Slide on the clutch basket and shock absorber at the same time.
2. Slide the clutch locking tool (ST 5) onto the dog.
3. Insert the washer and locking plate.
4. Screw the M12 nut on tightly, turn the locking plate.
5. Insert one pressure rod, then insert the ball and the second pressure rod.
6. Insert the disc spring.
   The inner circumference lies on the dog, the outer circumference points to the plate packet.
   If the disc spring and plates are not replaced, the same plate must be positioned next to the disc spring.
7. Starting with an inner plate, insert 6 inner and 6 lining plates in alternation.
8. Loosen the lock nut of the adjusting screw, snap the pressure plate with gear onto the clutch packet.
9. Install the springs with screws and washers. Tighten in crosswise manner.
10. Adjust the clutch.

Tightening torque:

Clutch dog nut:	58^{+4} Nm
Clutch spring screws:	5^{+1} Nm

6.5 Gearshift

6.5.1 Selector Shaft

Removal

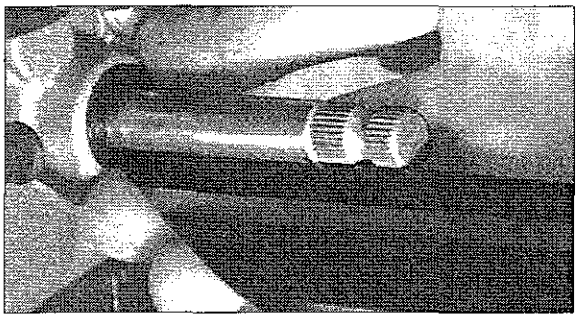

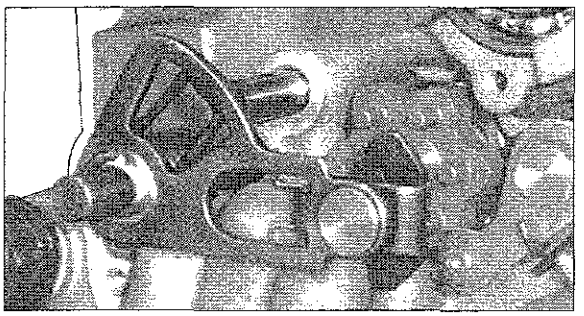

1. Remove clutch (see 6.4.3 "Removing the Clutch").
2. Remove gearshift lever.
3. Thoroughly clean the selector shaft near the secondary chain.
   Soiling can cause the selector shaft to jam when sliding through the engine housing.
4. Remove pinion cover.
5. Check the selector shaft for deformation.
   To do this, place a steel ruler or angle iron on the part that juts outward.
6. Pull out the selector shaft.

Inspection

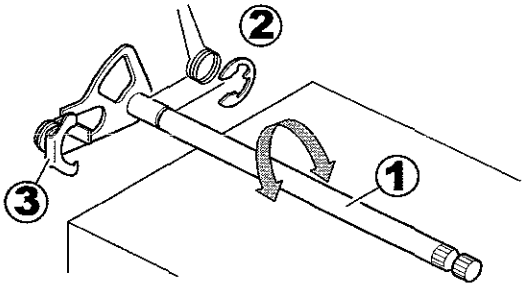

1. Check the curvature of the selector shaft (1).
   To do this, roll the selector shaft over a flat surface.
2. Check the pull-back spring and retaining ring (2) for fractures.
3. Test the ease of action of the lever (3).

Installation

Install in reverse order.

6.5.2 Free Wheel

Removal

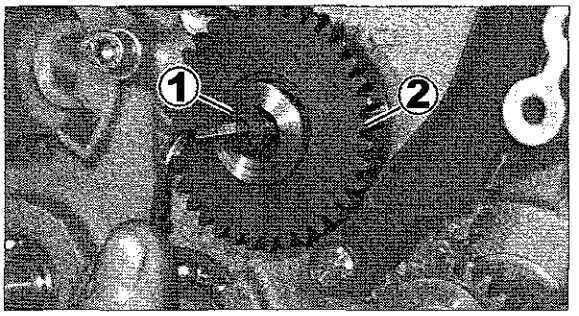

1. Completely remove the clutch.
2. Remove the shock absorber.
3. Unscrew the countersunk screw (1), remove the washer, remove the free wheel (2) from the balancing shaft.

Testing

The free wheel must lock at every position (360°).

1. Hold the free wheel drum in place.
2. Turn the free wheel in 5° steps, alternating between clockwise and counter-clockwise.
   If the locking function does not work in the counter-clockwise direction, the free wheel is defective and must be replaced.
   If pronounced chatter marks are found on the free wheel, the free wheel must be replaced.

Removal of the free wheel is only useful for determining the extent of wear. The free wheel is destroyed by removing it.

Installation

Install in reverse order.
The free wheel drum with free wheel is delivered as a complete spar part.

6.6 Pumps

6.6.1 Oil Pump

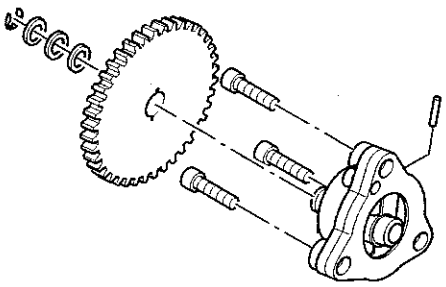

The engine has a pump circulated lubrication system. The oil is supplied to the lubrication points of the engine and transmission by a feed pump.

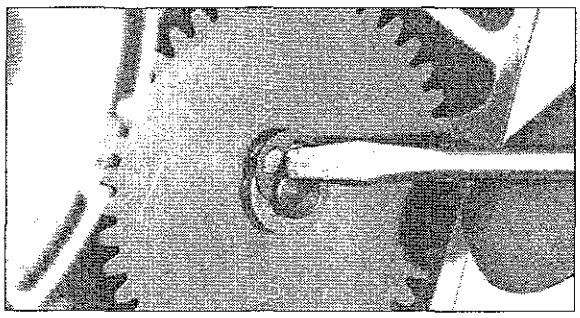

Removal

1. Drain oil from the engine, remove the crankcase cover (see 6.4.3 "Removing the Clutch").
2. Remove the locking washer from the pump shaft, remove the 3 thrust washers.
3. Pull off the oil pump gear.

Note:
Be careful, the straight pin can fall out of the hole into the oil pump. Loss possible!

4. Remove the pump drive wheel.
5. Unscrew the 3 cylinder screws, remove the oil pump.

Inspection

Inspect the following components for wear/cracks/damage, replace the oil pump if necessary:

- Housing (3)
- Gear, oil pump
- Inner rotor (1)
- Outer rotor (2)

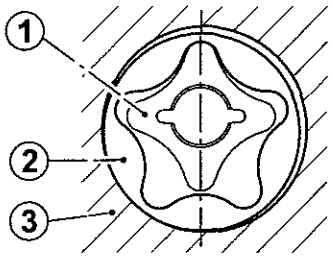

If significant wear marks are found, replace the oil pump. Also take the oil pressure into consideration (see 6.2.7 "Checking the Oil Pressure").

Installation

Install in reverse order.
The cylinder screws are microencapsulated.
If the screws are reused, secure the threads by means of LOCTITE 243.

6.6.2 Water Pump

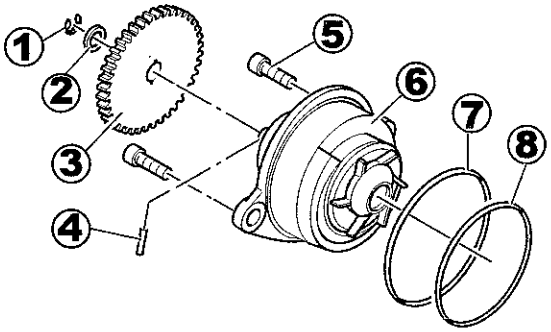

(1) Lock washer
(2) Thrust washer
(3) Gear, water pump
(4) Straight pin
(5) Cylinder screws
(6) Water pump
(7) O-ring 7x56 HBR
(8) O-ring 8x53 HBR

Removal

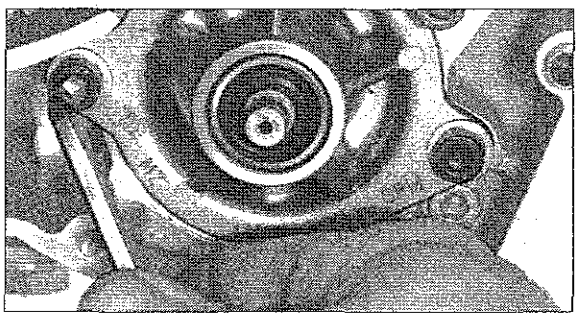

1. Drain oil from the engine, remove the crankcase cover (see 6.4.3 "Removing the Clutch").
2. Remove the locking washer from the oil pump shaft, remove the 3 washers.
3. Unscrew the nut for the pump drive gear.
   Left-handed threading! Remove the drive gear from the crankshaft.
4. The following step is not necessary in every case, because the screws (5) are accessible.
   Remove the locking washer, thrust washers and gear from the pump shaft.
   Make certain that the straight pin (4) does not fall out of the hole, as it may get lost.
5. Unscrew the 2 screws.
6. Pull the pump out of the housing.
   The O-rings may offer resistance in the housing.

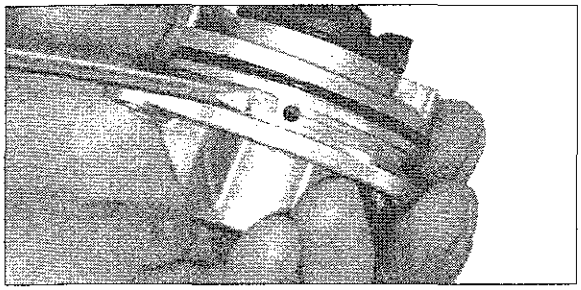

2 holes are located in the centre of the water pump.

- Discharge hole for oil that may have entered due to a defective O-ring or a defective shaft seal ring (under the drive wheel).
- Discharge hole for water that may have entered due to a defective O-ring or a defective seal under the pump wheel.

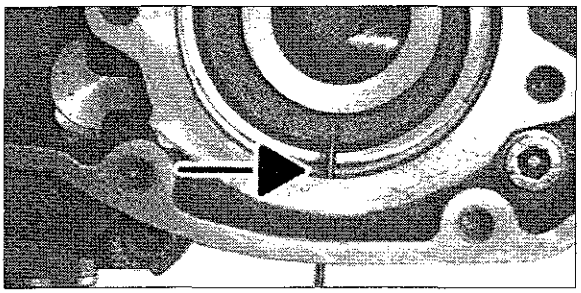

There is a hole in the water pump seat in the engine housing which allows oil or water to flow out through the housing. Clean the hole if necessary using a suitable tool (figure).

Inspection

Inspect the following components for wear/cracks/damage, replace the water pump if necessary:

- Housing
- Gear, water pump
- O-rings
- Impeller

O-rings can be replaced separately. The water pump is replaced as a unit.

Installation

6.7 Cylinder Head

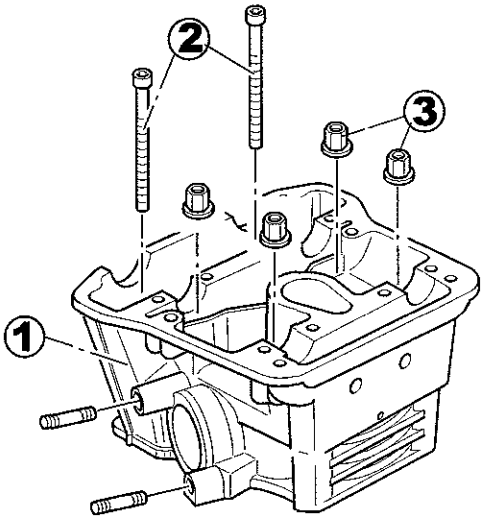

If work is only being performed on the cylinder head, the engine can remain in the frame. To do so, drain the coolant!
Before working on the cylinder head, the spark plugs should be removed.

(1) Cylinder head
(2) Cylinder screws
(3) Nuts

6.7.1 Removal

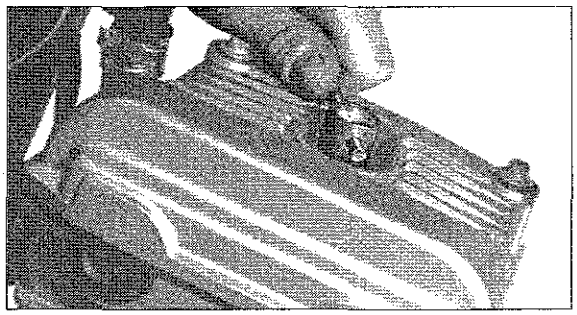

1. Remove the seat and fuel tank.
2. Remove the spark plug connector.
3. Remove the spark plug.

4. Unscrew the 4 decoupling elements from the valve cap (Torx© E10).
5. Remove valve cap, check seal.

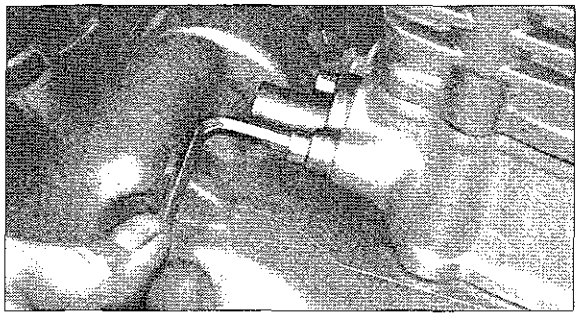

8. Unscrew the M6 hexagon head screw from the chain adjuster.
   The tension is removed from the chain adjuster.
9. Unscrew the 2 cylinder screws, remove the chain adjuster from the cylinder.
   The top side of the chain adjuster is marked with an "o".

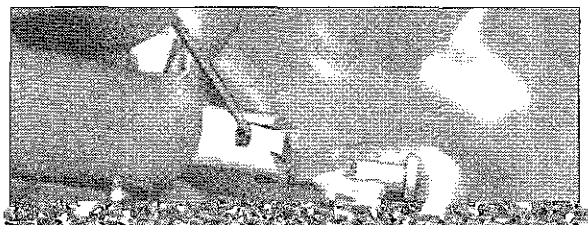

10. Press down on the locking catch of the timing chain adjuster from above using a screw driver. Insert the pressure pin.

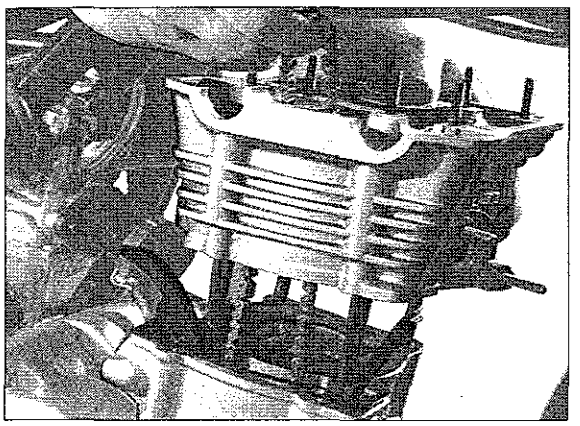

16. Pull the timing chain upward so that the tension rail can be moved freely.
17. Pull the cylinder head away from the stud bolts.

Note:
Only replace the cylinder head seal together with the cylinder base seal.

Inspection

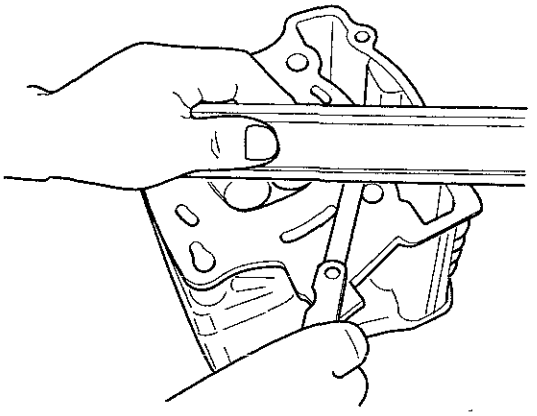

Use an oil stone to clean combustion residue from the sealing surfaces.
Inspect the cylinder head for cracks.
Check that the sealing surface is level by placing a straight-edge over both diagonals.
Wear limits: 0.02 mm

6.7.2 Valve Train

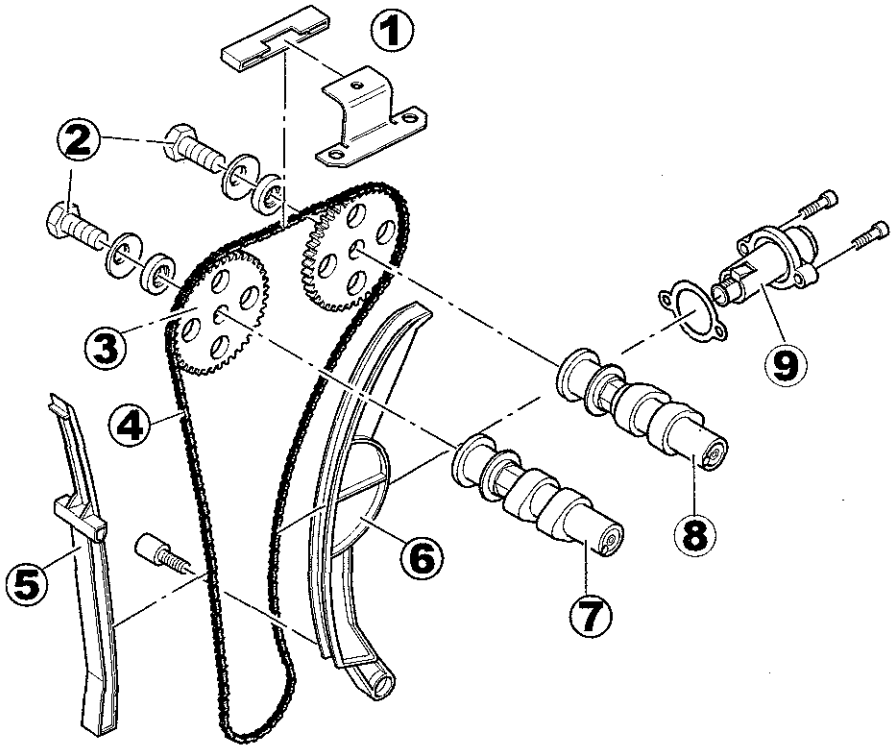

(1) Guide rail top and support plate
(2) Hexagon head screws
(3) Chain wheels, camshaft
(4) Timing chain 92 RH 2010-122M
(5) Guide rail
(6) Tension rail
(7) Exhaust camshaft
(8) Intake camshaft
(9) Chain adjuster

6.7.3 Timing Chain, Tension and Guide Rails

Removal

1. Remove the guide rail.

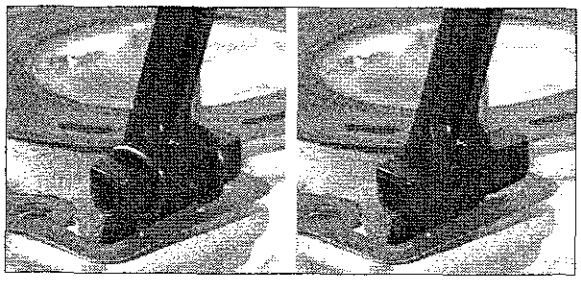

Left:	Guide rail with O-rings, RT 125 up to cylinder no. 37-42.050 (sand casting)
Right:	Guide rail with O-rings, RT/SX/SM 125 starting with cylinder no. 37-42.053 (gravity die casting)

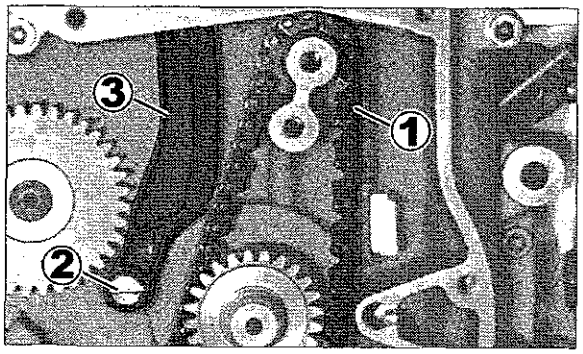

2. Run the timing chain (1) downward.
3. Unscrew the screw (2), pull out the tension rail (3) upwards.

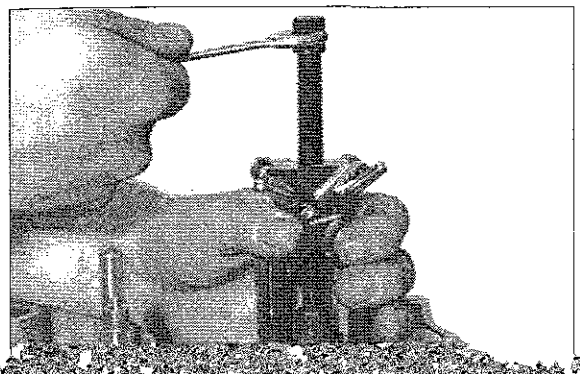

4. If necessary, unscrew the M16 nut (**left-handed threading!**), primary drive, and remove the pump drive gear.
5. Pull off the primary drive wheel using the claw removal tool (ST).

6.7.4 Chain Wheel, Camshaft

Removal

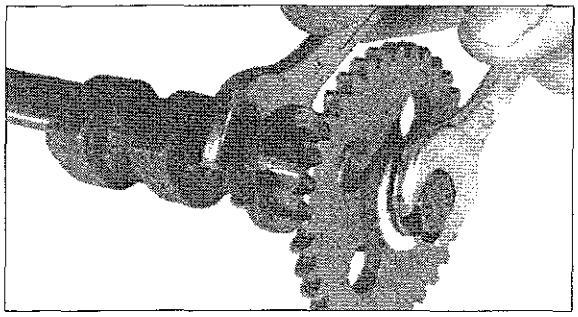

1. Hold the camshaft with the open-jawed spanner ST 16 and screw off the chain wheel screw with ST 13.

Inspection

- Camshaft:

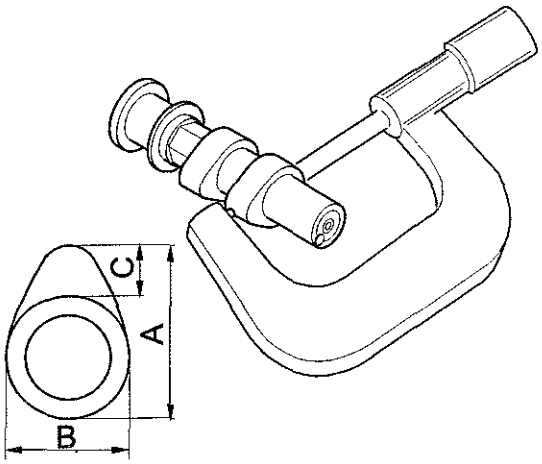

(A) Intake: 32.80 - 32.90 mm; minimum 32.65 mm
Exhaust: 31.95 - 32.05 mm; minimum 31.80 mm

(B) Intake: 25.95 - 26.05 mm; minimum 25.80 mm
Exhaust: 25.95 - 26.05 mm; minimum 25.80 mm

(C) Intake: 6.85 mm
Exhaust: 6.15 mm

Outer diameter at the bearing: 19.967 - 19.98 mm
Clearance between the camshaft and cover: 0.020 - 0.046 mm
maximum permissible eccentricity at the bearing: 0.03 mm

- Chain Wheel, Camshaft:

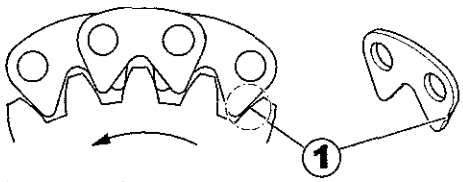

When the components are adjusted correctly, light markings can be seen centred on the edges of the timing chain (1) and the edges of the chain wheels (2).

Installation

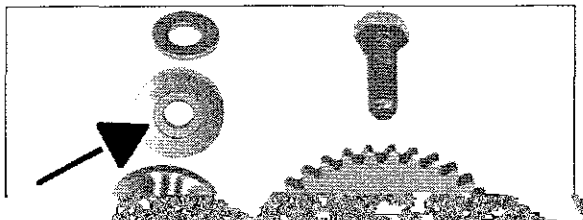

1. Replacing the chain wheel and/or camshaft.
   Always position the chain wheel with the writing facing the screw.
   The curved side of the curved washer must always be toward the screw head.
2. Insert the thrust washer, screw on the chain wheel.

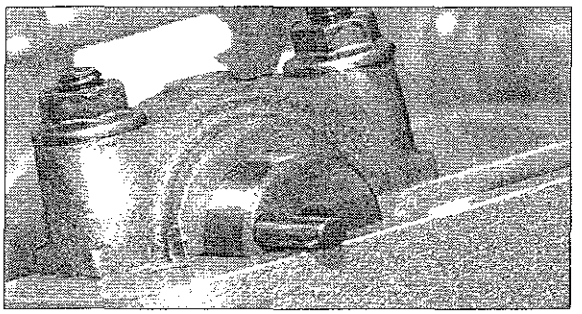

8. Insert the locking pins into the holes in the camshaft.
   The locking pins for both camshafts must rest against the cylinder head on the left next to the centre of the camshaft. Now the camshafts are pre-adjusted.
9. Position the bearing covers correctly, screw on the bearing covers and guide rails.
10. Inspect the bearing clearance.

Attention!

A new head seal and a new base seal must be used after every removal of the cylinder head.

11. Screw on the chain adjuster.
    The "o" mark on the toothed rack must point upward.
12. Tension the timing chain.
13. Check and adjust valve clearance, if necessary.

Tightening torque:

Bearing cover screws:	10^{+2} Nm
M8 collar nuts:	22 Nm + $80°^{+10°}$
M6x90 cylinder screws:	10^{+2} Nm

6.8 Valves

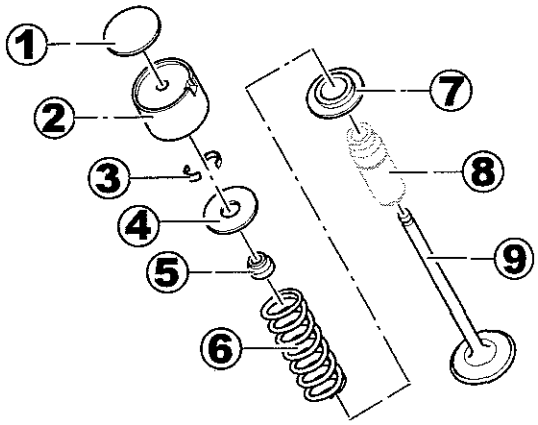

(1) Adjuster disc
(2) Bucket tappet
(3) Valve collet
(4) Spring plate
(5) Valve shaft seal
(6) Valve spring
(7) Valve spring support
(8) Valve stem guide (not replaceable)
(9) Valve (exhaust/intake)

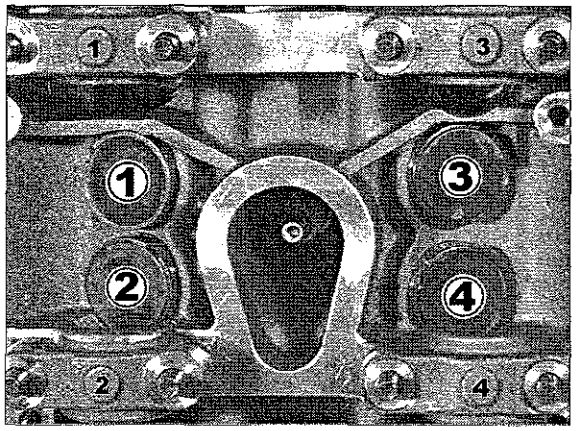

Before removing the valves from the cylinder head, they must be marked.
The markings (numbers) of the camshaft bearing covers are also imprinted on the cylinder head.

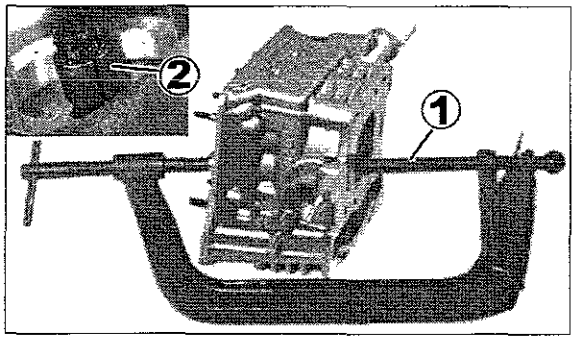

1. Remove the bucket tappets and adjuster discs from the valves.
2. Use the valve spring tensioner and the valve spring tensioner adapter (ST) (1) to press the spring plate and spring together.
3. Remove the valve collets (2) (2 per valve).
4. Remove the spring plate and valve spring.
5. Remove the valve stem seal from the valve stem with the ST 2.
6. Remove the valve spring support.
7. Pull the valve down and out.

The valve stem guide and valve seat rings are not intended to be replaced.

Attention!

Engine damage!

The cylinder head seal surface may not be turned out. Otherwise the pistons might beat against the valves and sustain damage.
Valve lengths may never be shortened.

Inspection

Valve dimensions:

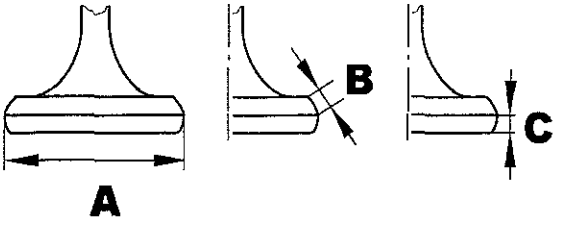

	ON in mms	OFF in mms
(A) Valve plate diameter	23.9 - 24.1	20.4 - 20.6
(B) Valve plate width	3.44 - 4.04	3.44 - 4.04
(C) Valve plate thickness	0.63	0.63
Valve stem outside diameter	3.978 - 3.992 min. 3.95	3.968 - 3.982 min. 3.95
Valve stem guide inside diameter	4.000 - 4.012 max. 4.05	4.000 - 4.012 max. 4.05
Valve stem - valve stem guide clearance	0.008 - 0.034 max. 0.07	0.018 - 0.044 max. 0.09

Tappet clearance (while cold, 20±5 °C):

ON: 0.09 - 0.11 mm
OFF: 0.11 - 0.14 mm

Valve stem eccentricity:

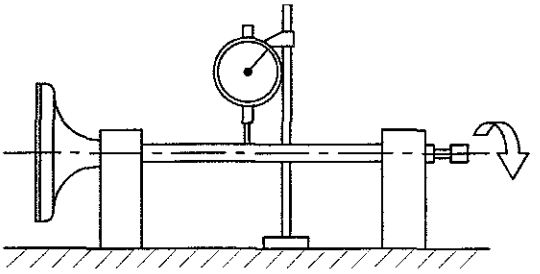

maximum permissible valve stem eccentricity:
more than 0.01 mm

Bucket tappet:

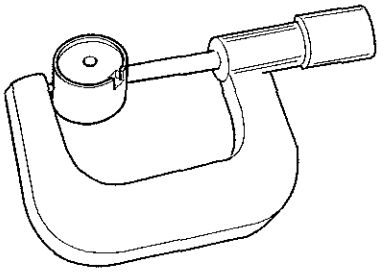

Outer diameter: 24.967 - 24.980 mm
Clearance: 0.020 - 0.054 mm

Valve springs:

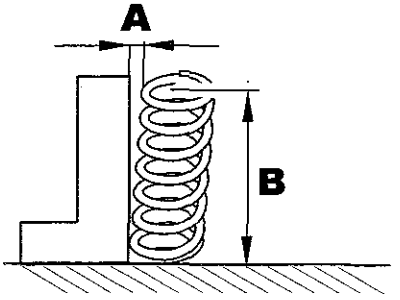

(A):

max. perm. inclination:	ON	1.1 mm (1.5°)
	OFF	1.1 mm (1.5°)

(B):

Length, untensioned:	ON	41.8 mm
	OFF	41.8 mm
Length, installed:	ON	33.5 mm
(valve closed)	OFF	33.5 mm

6.8.1 Valve Seat

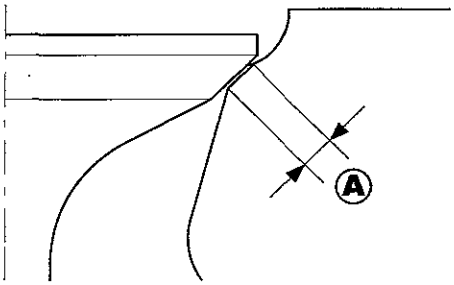

Carbon deposits must be removed from the valve plate and valve seat.
Inspect the valve seat for pits and wear.
Measure the valve seat width:

Intake:	1 - 2 mm
Exhaust:	1 - 2 mm

Measurement procedure

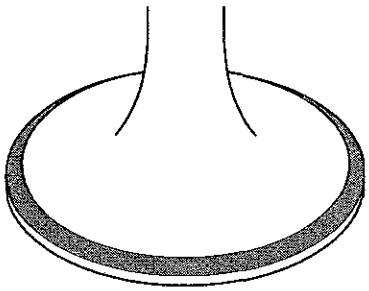

The valve that corresponds to the given valve seat must be used for the measurement process.

1. Apply touch-up paint to the valve plate.
2. Insert the valve into the cylinder head.
3. Press the valve against the valve seat with the valve stem guide to receive an accurate result.
4. Measure the valve seat width.
   The paint is worn off at all points where the valve plate and valve seat surface come into contact.

If the valve seat is too wide, too narrow or not centred properly, the valve seat must be reworked.

Fault correction

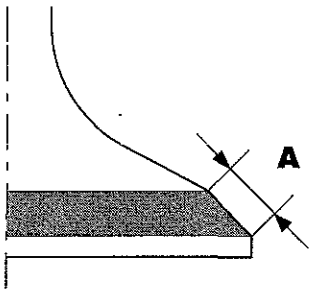

(A): The valve seat is centred, but too wide.

Valve or valve seat ring worn out.
Replace the cylinder head!

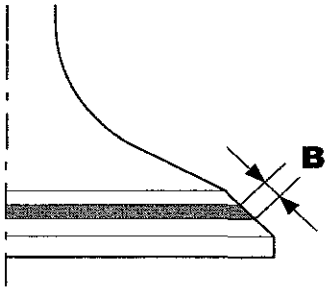

(B): The valve seat is centred, but too narrow.

Valve seat grinder set		Goal
Use	45° grinder	even valve seat width of at least 1 mm

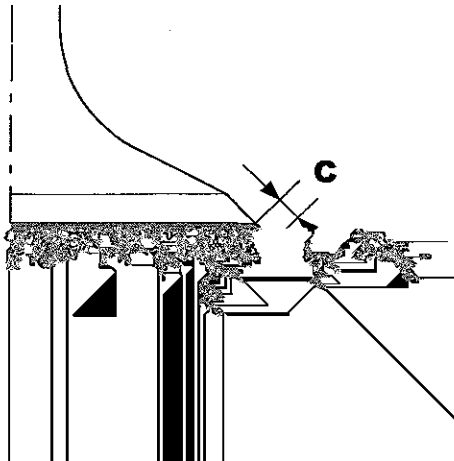

(C): Valve seat too narrow and near upper edge.

Valve or valve seat ring worn out.
Replace the cylinder head!

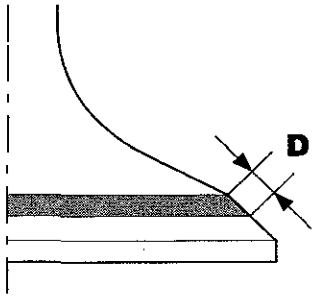

(D): Valve seat too narrow and near the lower valve plate edge.

Valve seat grinder set		Goal
Use	45° grinder	even valve seat width of at least 1 mm

Condition (D) only occurs with the use/replacement of new valves.

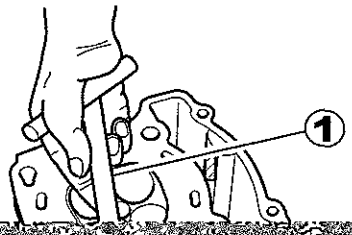

Regrinding

Grind the valve seat 45° with the specified valve seat grinder. Always use the appropriate valve seat grinder.

1. Position the valve seat grinder (1) and centre it in the valve guide.
2. Turn the valve seat grinder downward onto the valve seat with even pressure (approx. 4 - 5 kg).

Fine grinding

After the valve seat has been reworked and the valve replaced, if necessary, the valve seat and the valve plate must be lapped in.

Note:

No lapping material may come between the valve stem and valve stem guide!

7. Centre the valve spring and plate.
8. Install the bucket tappets according to the numbering.
9. Insert the camshaft and determine the valve clearance, correct if necessary.

6.8.2 Adjusting Valve Clearance

Note:
Only adjust the valve clearance on a cooled engine (approx. 20 °C)!

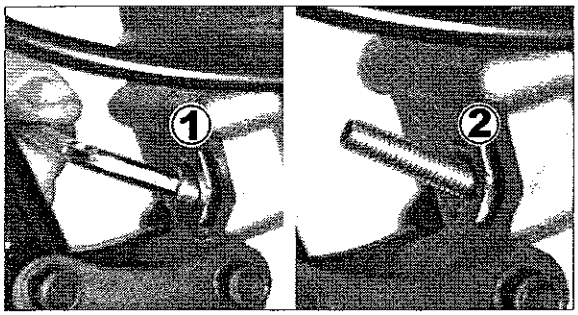

1. Remove the alternator cover and valve cap.
2. Set the engine to the top dead point with the help of the alternator rotor (see 5.5 "Alternator").
3. Unscrew the cylinder screw (1), screw in the crankshaft locking bolt (2) (ST 1)

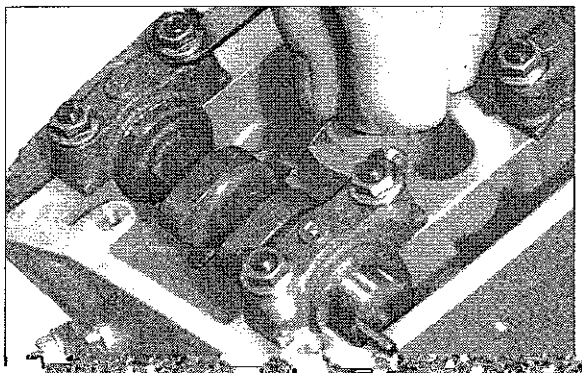

4. Determine the clearance for all valves using a thickness gauge, adjust if necessary.
   Insert adjusting plates of the required thickness to make the adjustment.

Valves	Clearance in mms
Intake	0.09 - 0.11
Exhaust	0.12 - 0.14

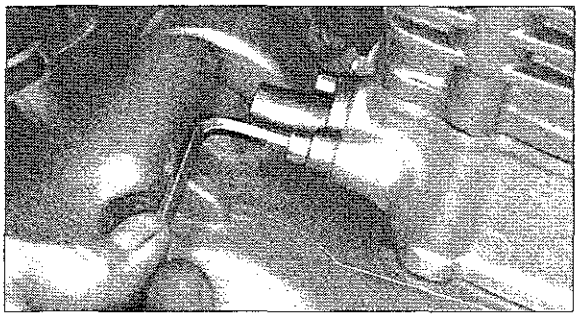

1. Unscrew the M6 screw on the timing chain adjuster.
2. Unscrew the 2 cylinder screws, remove the timing chain adjuster from the cylinder.

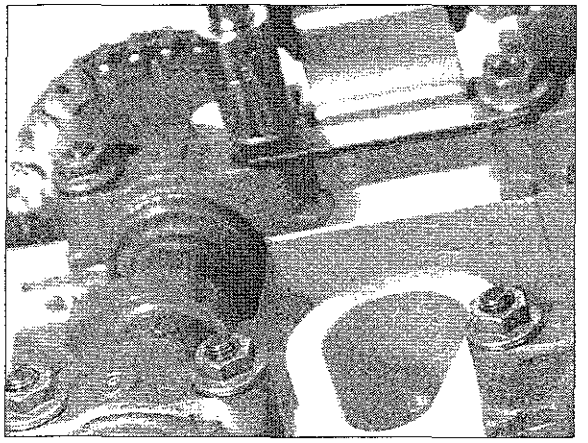

3. Remove the guide rail and camshaft bearing caps.

Possible engine damage!

The nuts and sleeves must not fall into the timing chain shaft!

4. Remove the timing chain from the chain wheels.
5. Remove the camshafts.
6. Lift out the adjuster plates using a tweezers or screw driver.

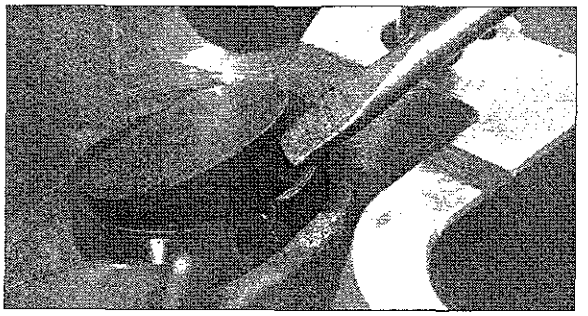

7. Insert an appropriate adjuster plate into the cleaned bucket tappet.
8. Lubricate the camshaft bearings, insert camshaft.
9. Install the bearing caps and guide ails on top and screw on.
10. Inspect the bearing clearance.
11. Screw on the valve caps.

Tightening torque:

Decoupling elements:	8^{+2} Nm

6.9 Cylinders

6.9.1 Removal

1. Remove the cylinder head seal (1).
2. Remove the 2 fitting sleeves (2) for locking the cylinder head from the cylinder.
3. Remove the cable (3) from the oil pressure sensor.

6.9.2 Cylinder Dimensions

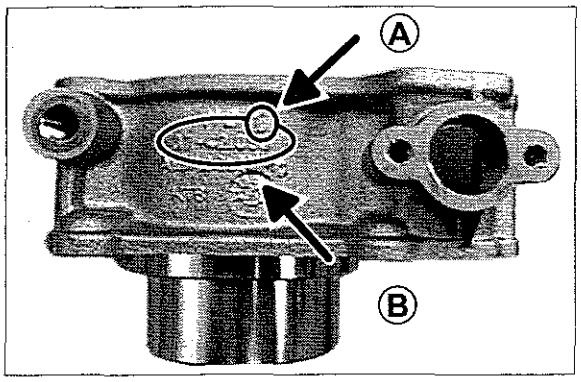

There are "A", "B" and "C" cylinders (A) in accordance with the cylinder diameters.
The blank number (B) is placed on the cylinder:

- 37 - 42.050 Sand casting cylinders
- 37 - 42.053 Gravity die casting cylinders

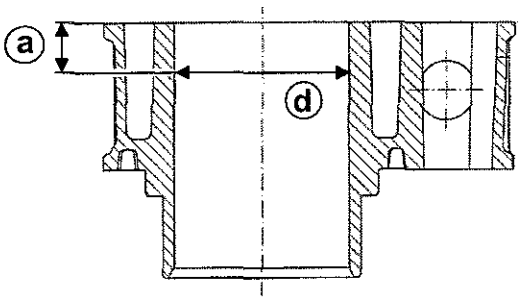

The diameter of the cylinder hole (d) is measured at a distance of (a) = 12 mm from the upper edge.

Cylinder dimension group	Diameter (d) in mms
A	59.988 - 59.996
B	59.997 - 90.003
C	60.004 - 60.012

6.9.3 Piston

Removal

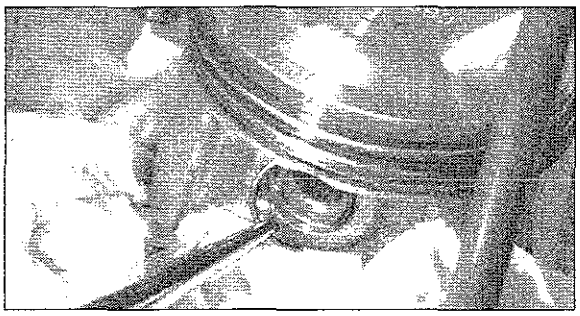

1. Place cleaning paper or a clean rag into the crankshaft and chain shaft.
2. Remove the wire retaining ring with a pliers.
   The removed wire retaining rings must not be reused.
   Always install new rings.

3. Debur the retaining ring groove and pin hole, if necessary.
   The retaining ring groove must have sharp edges, otherwise secure seating of the wire retaining ring is not guaranteed.

Piston installation clearance:

Piston installation clearance (difference of cylinder hole to piston outside diameter): 0.020 - 0.040 mm.
Wear limit: 0.06 mm
The piston dimension group is placed on the piston base.

Piston ring grooves:

Measure the space between the piston rings and the piston ring grooves with a thickness gauge.

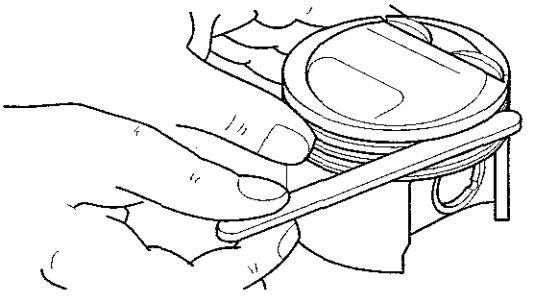

	Clearance	Ring heights
Ring 1 (rectangular ring)	0.015 - 0.060 mm	0.965 - 0.995 mm
Ring 2 (tapered compression ring)	0.020 - 0.055 mm	1.170 - 1.190 mm
Oil wiping ring	0.020 - 0.055 mm	2.470 - 2.490 mm

Piston pin hole:

Check the inside diameter **(D)** of the piston pin hole.
Wear limit: 15.005 mm

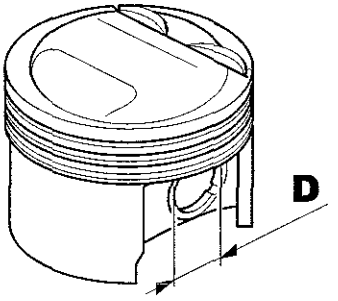

Piston dimension group

The piston dimension group is placed on the piston base.

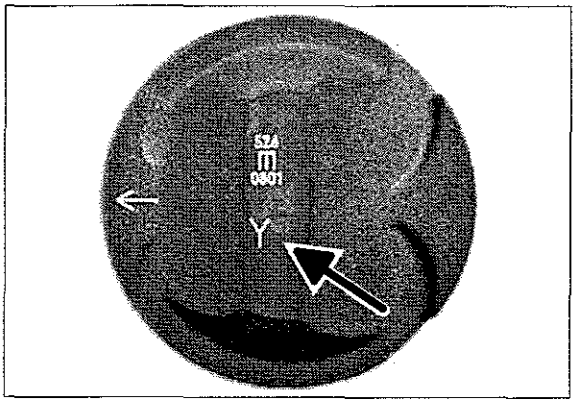

Usage in series up to engine no. MZ125 001994:

Piston dimension group	Piston 9015189000 Dimensions in mms
A	59.960 - 59.963
B	59.964 - 59.969
C	59.970 - 59.975
D	59.976 - 59.980

Usage in series starting from engine no. MZ125 001995:

Piston dimension group	Piston 9015204000 (Mahle), Dimensions in mms (without coating)
X	59.965 - 59.969
Y	59.970 - 59.975
Z	59.976 - 59.980

Installation

Note:

Piston rings are brittle and break easily.
Slide them on carefully, preferably using a typical installation tool!
The piston and piston rings must not be damaged.
The gap of the piston rings must be positioned 120° apart.

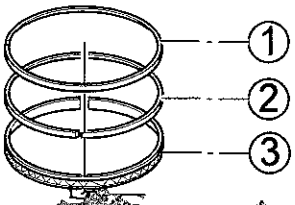

1. Install the oil wiping ring (3) with spring and wire ring.
2. Install the tapered compression ring (2).
   Install the tapered compression ring such that the "O" designation faces upwards (toward the piston head/valves).
3. Install the rectangular ring (1).

6.9.6 Intake Manifold

Removal

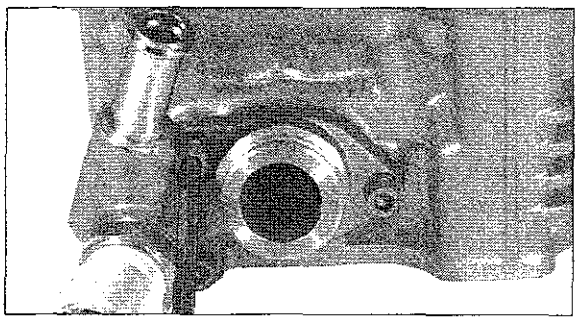

1. Unscrew the 2 cylinder screws.
2. Remove the intake manifold and seal.

Installation

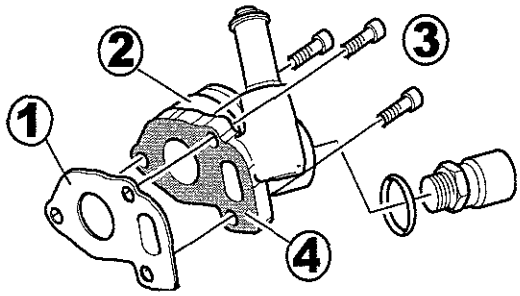

1. Inspect the seal (1), replace if necessary.
2. Inspect the intake manifold (2), replace if necessary.
3. Clean the seal surface (4) on the intake manifold and cylinder head with an oil stone.
4. Position the seal and intake manifold, screw in the cylinder screws (3).

Tightening torque:

Cylinder screws:	8^{+2} Nm

6.10 Transmission

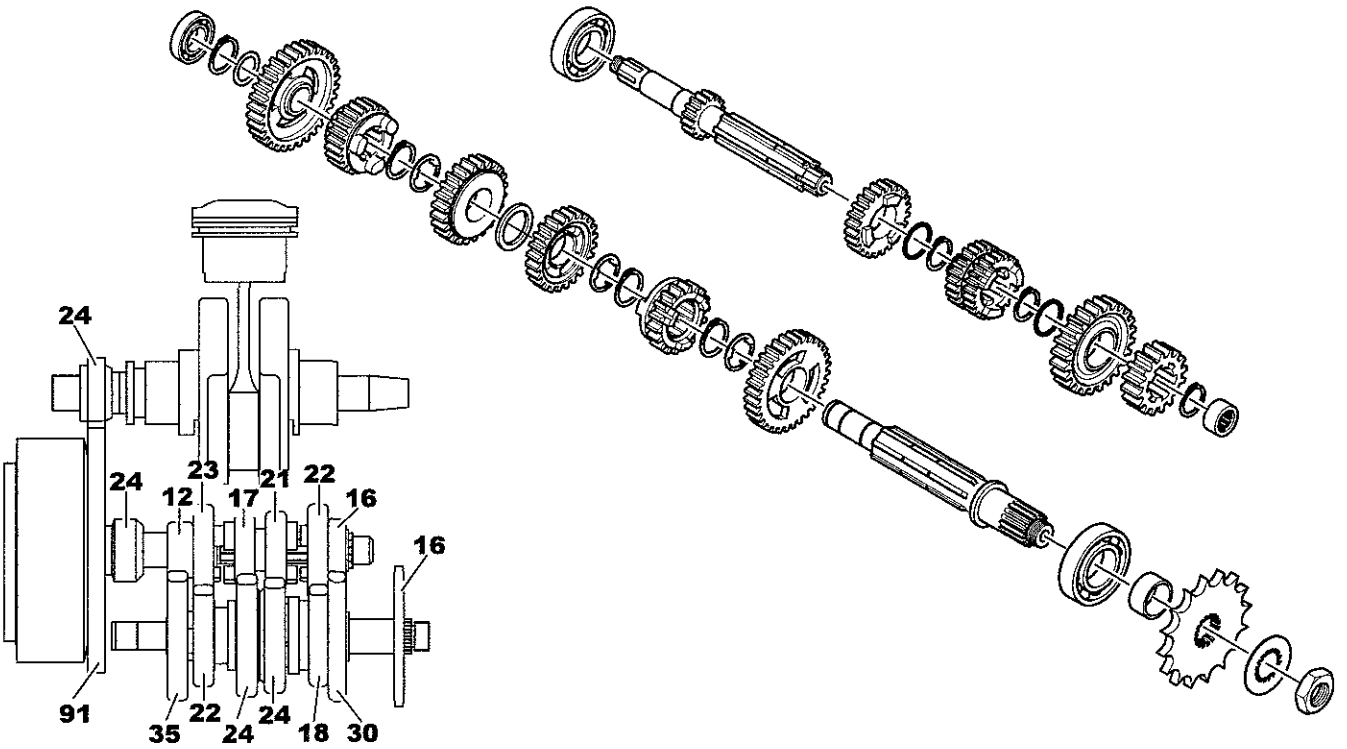

6.10.1 Removal

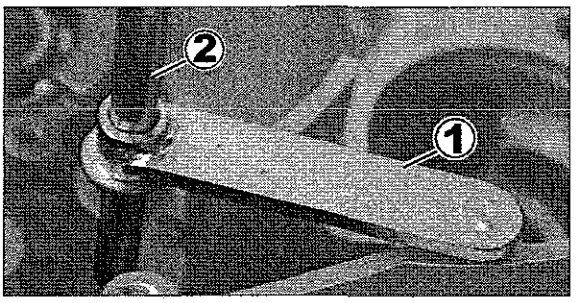

The index lever catches in the star wheel.
If it does not need to be removed upon separation of the crankcase halves, it must be locked in place using the ST 9 "index lever counter lock".

1. Insert the pin of the lever (1) of the ST into a hole in the housing half.

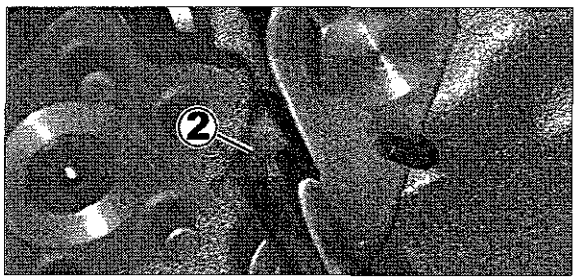

2. Press back the index lever with the pin (2) of the ST 9 and affix it tightly to the housing ledge next to the star wheel.

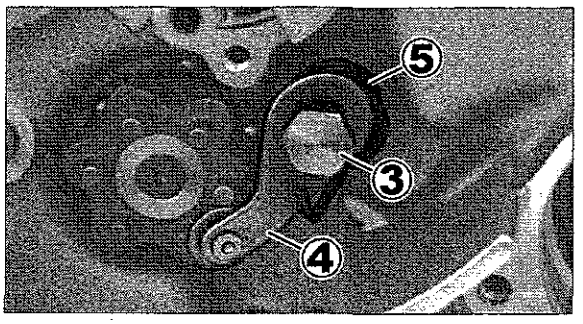

If the index lever counter lock ST is not used:

1. Unscrew the M6 pin (3) , remove the index lever (4) and torsion spring (5).
2. Remove pinion and sleeve.
3. Completely remove the alternator cover.
4. Remove the sensor and stator.
5. Remove the curved washer.
6. Turn the crankshaft locking bolt back 10 turns so that the crankshaft turns freely.

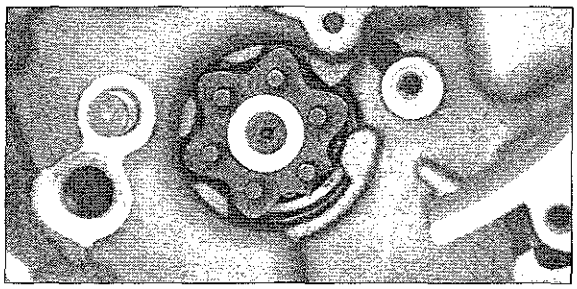

7. Unscrew the 11 screws from the housing.
8. Bring the star wheel into idling position, such that it does not touch the crankcase halves when they are separated.
   In any other position, the star wheel does not fit through the housing opening, the gears may jam.

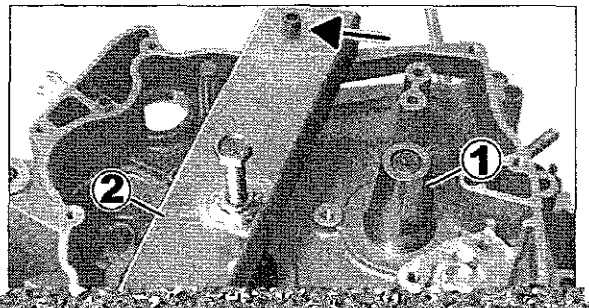

9. Slide the "protective sleeve" ST 12 (1) onto the tail shaft.
10. Screw the "housing separation tool" ST 8 (2) onto the right half of the housing using the 2 longer cylinder screws of the alternator cover.
    The tool must be positioned parallel to the housing. If necessary, loosen a screw somewhat to align the tool.
11. Turn the M10 screw of the "housing separation tool" ST 8 and press off the right housing half.
    The balance washers of the crankshaft, the balance shaft

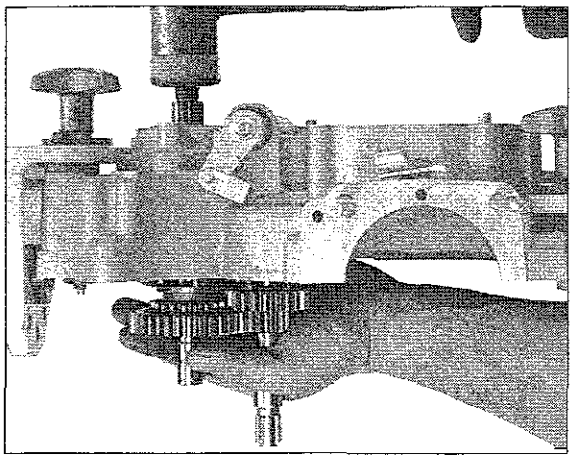

16. Remove the transmission from the left housing half with light taps on the drive shaft using a plastic hammer.

The driven shaft (1) and drive shaft (2) can be further dismantled.

17. Remove the locking rings, washers and spacer washers, pull of the gear wheels.

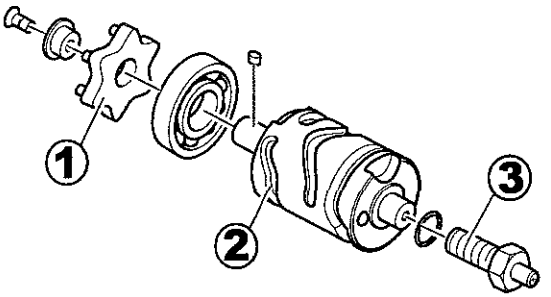

Camshaft controller:

Inspect the tight seat of the star wheel.
Check the control cam grooves for wear.
Inspect the idling switch and flat seal ring for wear and proper functioning.

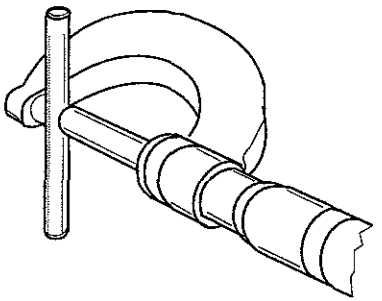

Selector fork shafts:

Measure the thickness of the selector fork shaft.
Wear limit: 9.95 mm

Roll the selector fork shaft over a flat surface (such as a surface plate), maximum warping 0.05 mm.
Replace the selector fork shaft if deformed.

Attention!

Never attempt to straighten the selector fork shafts.

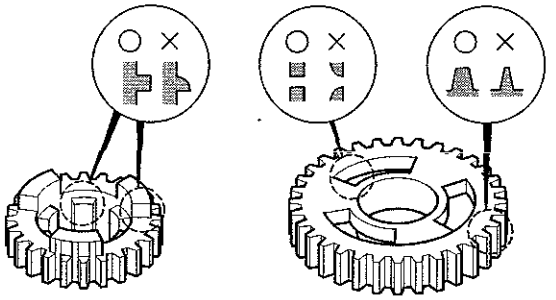

Gear wheels:

Inspect every gear wheel for wear and damage, look for indications of heat damage (blue discoloration).
Every control gear must slide easily along its shaft.
Check the grip of each gear into its opposite gear. Inspect the teeth of the transmission gear wheels for pit formation and wear, replace if necessary.
Inspect the shifting claws and apertures for rounded edges, cracks and missing parts, replace if necessary.
O = OK: X = worn = replace.

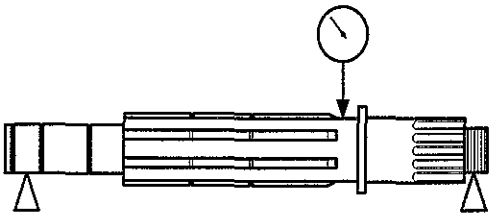

Driven and drive shaft:

Measure the radial run-out deviation:
Driven shaft: maximum 0.05 mm
Drive shaft: maximum 0.05 mm

The shafts cannot be aligned. They must be replaced.

6.10.3 Crankshaft and Balance Shaft

Inspection

Crankshaft:

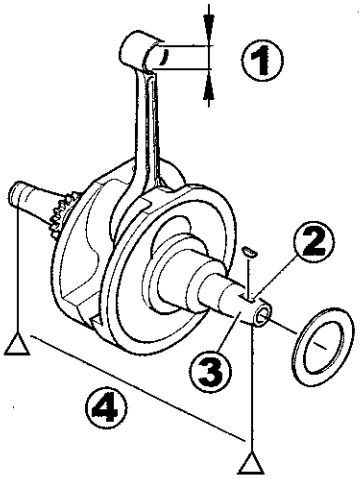

(1) Measure the radial clearance on the connecting rod eye.
Maximum diameter of the connecting rod eye 15.035 mm

Measure the piston bolt (see 6.9.3 "Piston").
Determine the clearance.
Maximum clearance: 0.050 mm

(2) Inspect the grooves for the curved washers.
(3) Inspect the cone surface for wear and damage.
(4) Inspect true run.
Maximum clearance: 0.03 mm

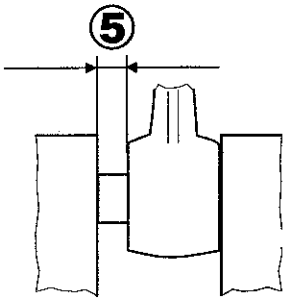

(5) Measure the axial clearance of the connecting rod eye.
Maximum clearance: 0.5 mm

Balance shaft:

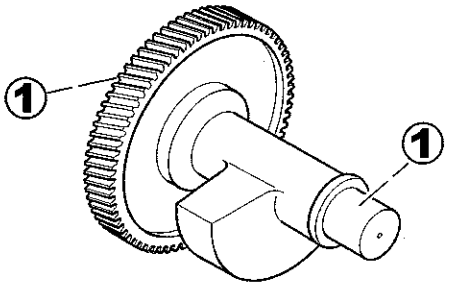

Inspect the bearing (1) and shaft for wear and proper true run.

Shock absorber:

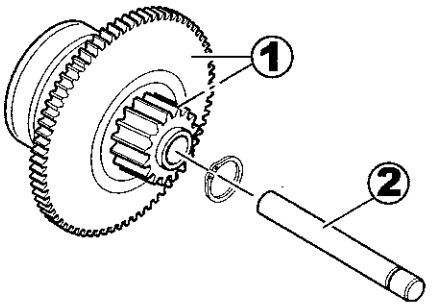

(1) Inspect the teeth for wear and damage.
(2) Check the roundness and the wear of the shaft.

Adjusting the clearance between the engine housing and crankshaft or balance shaft

After replacing the crankshaft and balance shaft and/or the housing, the clearance between the crank and balance shafts must be adjusted.

Clearance: 0.08 - 0.13 mm

This adjustment is made using thrust washers.

The difference in thickness between the washers may not be greater than 0.1 mm on the left and right.

Do not use any washers of less than 0.8 mm.

1st option:

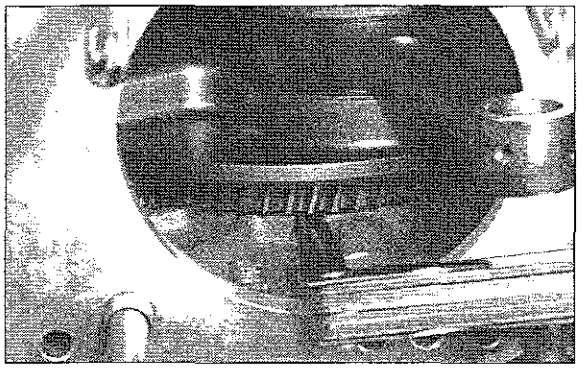

1. Screw the housing onto the crankshaft or balance shaft without transmission.
2. Slide the shafts to one side, turn multiple times and measure the clearance between the crankshaft and housing.

2nd option:

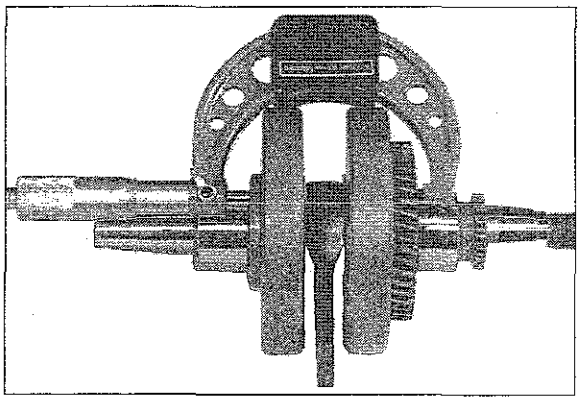

1. Measure the housing clearance near the crankshaft bearing using a depth indicator.
2. Measure the width of the crankshaft cheeks (e.g. with a micrometer):
3. Housing clearance minus crankshaft cheek width = clearance.

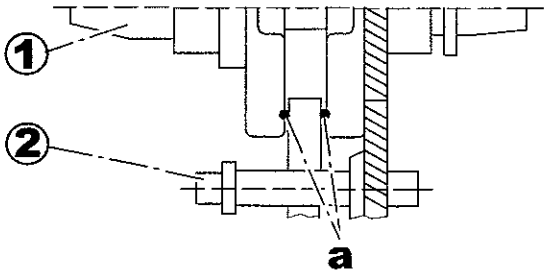

There must be a distance of at least (a) = 0.85 mm on both sides between the crank cheek of the crankshaft (1) and the balance weight of the balance shaft (2).

6.10.4 Installation

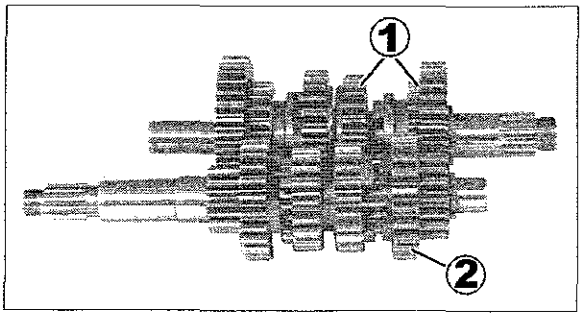

1. Place the drive and driven shafts into the crankcase.
2. Insert the balance shaft and crankshaft.
3. Adjust clearance (see 6.10.3 "Crankshaft and Balance Shaft").

6.11 Engine Installation and Adjustment

Attention!

When installing the engine, the following parts must be replaced:

- **O-rings**
- **Seals**
- **Locking washers**
- **Locking rings**

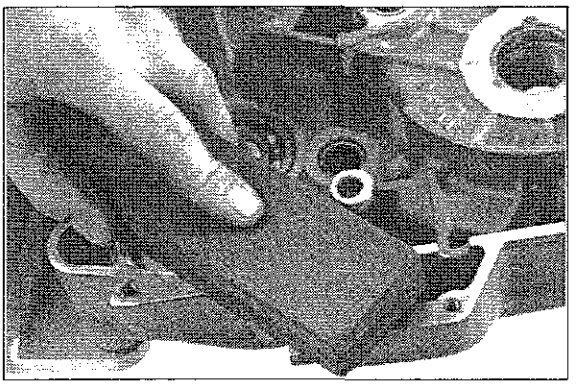

1. Use an oil stone to clean sealing material residue from the sealing surfaces.
   Do not use a sealing material remover.
2. Clean all parts thoroughly.

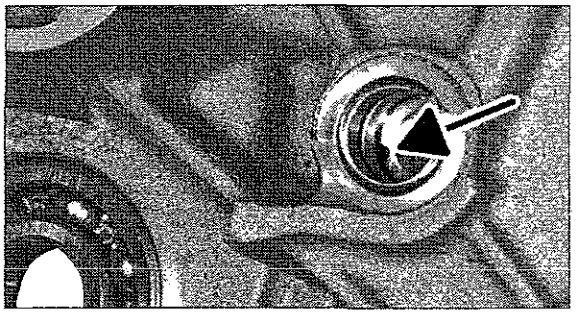

3. Thoroughly clean the oil channel of the balance shaft in the housing.
4. Insert the crankshaft.
5. Do not forget the washer on the left side of the crankshaft when replacing the seal ring.

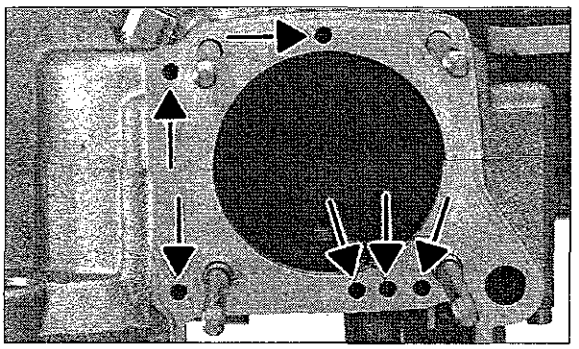

6. Clean oil channels.
7. Install the idling switch.
8. Install the transmission.
9. The transmission shaft must rest against the inner bearing rings.
   Tap down using a plastic hammer, if necessary.

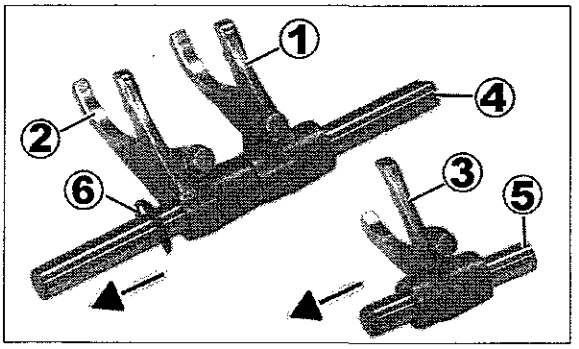

10. Clean oil away from the holes of the selector fork shafts in the housing.
11. Insert the selector fork into the guide path of the control gears:
    - selector fork 2/4 (1) in drive shaft, (designation 033 toward observer).
    - selector fork 1/3 (2) in drive shaft, (designation 034 toward observer) and
    - selector fork 5/6 (3) with pin in drive shaft, (designation 031 toward observer).
12. Install the camshaft controller and insert the selector fork into the camshaft controller.

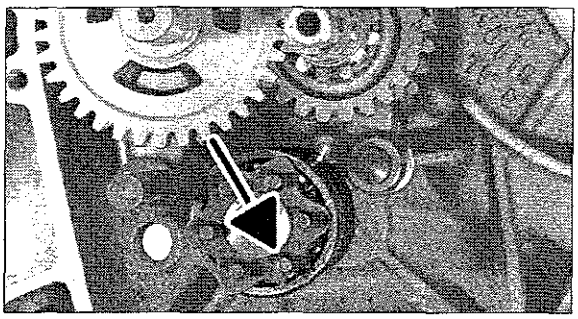

13. Slide the selector fork shafts into the guides (4) + (5).
    - Locking washer (6) toward observer.
    - Phase of the pin (5) toward observer.
14. Turn the camshaft controller to the "idle" position.
    Take note of the following:

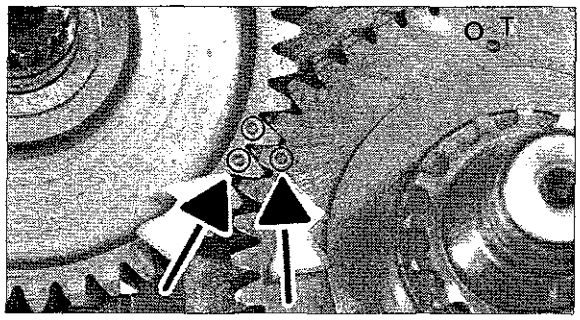

15. Lubricate sliding bearing.
16. Install the crankshaft and balance shaft such that the gear wheels interlock at the markings.

Attention!

The protective sleeve protects the crankshaft sliding bearing. If it is not used, the sliding bearing may be destroyed!

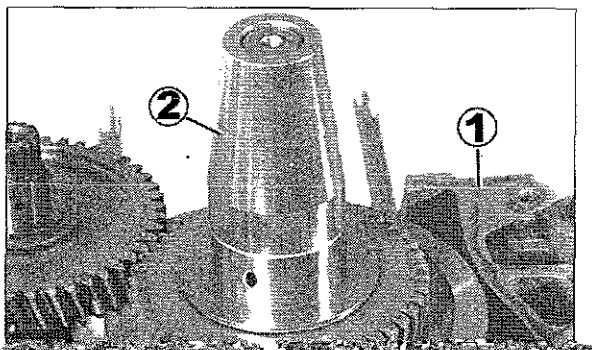

17. Slide the protective sleeve (2) onto the right tail shaft.
18. Apply the Loctite 518 sealant thinly and evenly to the seal surfaces (1) of the left half of the housing.

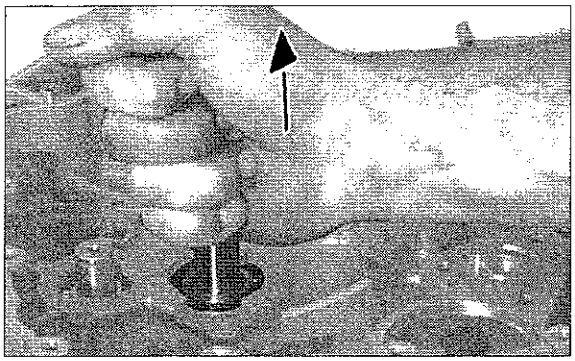

19. Place the housing on.
20. Inspect the freedom of motion and gears.
21. Position the right half of the housing, screw on the housing with the eleven screws, tightening in a crosswise manner.
22. Use brake cleaner and cleaning paper to remove the sealant forced out.
23. Install the index lever and lock in the camshaft controller at idle.
24. Install the screw plug with screen and the oil drain plug. Use new seals.
25. If the gears do not turn easily, pull the crankshaft free by hand.
26. Lightly oil the selector shaft and install.
27. Connect the selector shaft to the camshaft controller and switch through the gears.
    In doing so, turn the clutch and driven shafts against each other so that the gears can snap together.
28. Place the transmission in neutral after checking the gears.
29. Lock the crankshaft at the top dead point using the crankshaft locking bolt (ST 1).
30. Mount the timing chain, install the guide rail and tension rail. Apply screw locking agent LOCTITE 243 to the threading.
31. Connect the inspected and/or new starter free wheel to the balance shaft.
32. Apply screw locking agent LOCTITE 243, fasten the free wheel with washer and bolt.
    Observe the specified torque!
33. Install the water pump with new O-rings.
    Use new microencapsulated screws or screws with screw locking agent.
34. Install the oil pump.
    Use new microencapsulated screws or screws with screw locking agent.
35. Slide the thrust washer onto the clutch shaft.
36. Install the clutch basket, slide on the washer.
37. Install the dog, slide on the washer.
38. Insert "Clutch" ST 5, tighten nut.
39. Hold the clutch by hand to prevent turning, remove the special tool.
40. Place a dial gauge or depth indicator on the gear rim of the clutch and determine the axial clearance.
    Clearance: 0.05 - 0.15 mm
41. Re-insert the "Clutch" ST 5, remove the clutch basket, washer and dog.
42. Adjust the axial clearance of the clutch basket using thrust washers of the required thickness.
    The thrust washers are placed under the clutch basket.

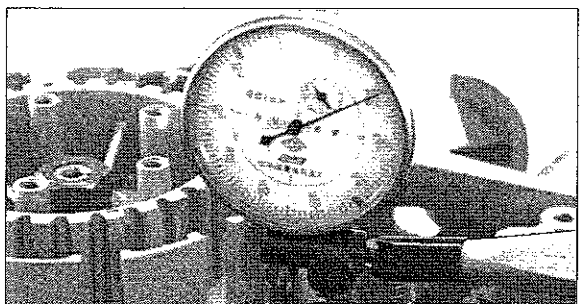

43. Lightly lubricate and install the clutch shaft.
44. Install the clutch basket and shock absorber.
45. Install the washer for the clutch.
46. Install the clutch dog.
47. Install the washer for the clutch, position a new locking plate.
48. Insert "Clutch" ST 5, tighten nut.
49. Degrease the cone in the primary chain wheel with brake cleaner. The engine must be in a vertical installation posi

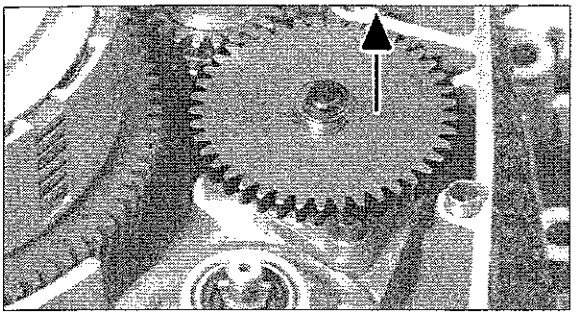

59. Insert the dowel pins into the pump shafts and mount the pump drive wheels.
60. Open the primary drive again (left-hand threaded nut), if necessary, to simplify the installation).
61. The shaft of the oil pump must be lifted so that the 3 washers and locking washer can be installed.
62. Install the ball, oil pressure adapter and spring.

Attention!

The seal must not change the cross-section of the supply and drainage openings for the oil filter and engine ventilation.

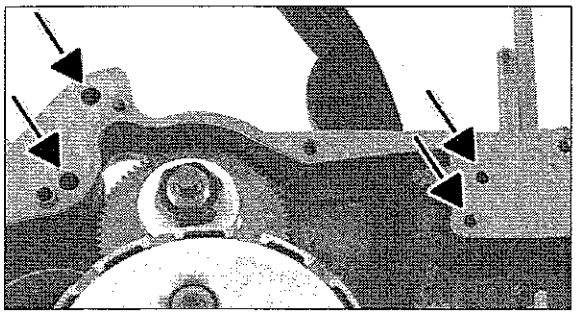

63. Position the new crankcase cover seal.
64. Position the crankcase cover, screw on with 14 cylinder screws.
65. Installing the oil filter (see 6.2.4 "Oil Filter").
66. Install the cylinder with new base seal.
67. Screw in the chain adjuster, tension the timing chain.
68. Install valve cap.
69. Install the complete cylinder head with new head seal.
70. Install the engine into the chassis.

6.12 Carburettor

Risk of fire and explosion!

Fuel is a flammable liquid of hazard class A1 and therefore an extreme fire risk. Fuel fumes are highly explosive.

Exercise extreme care when working with fuel and other easily flammable substances.
Only work with the engine switched off and in well ventilated areas. Do not smoke, keep flames and sparks away from the entire work area.
Safely remove drained or leaked flammable liquids away from the work area.

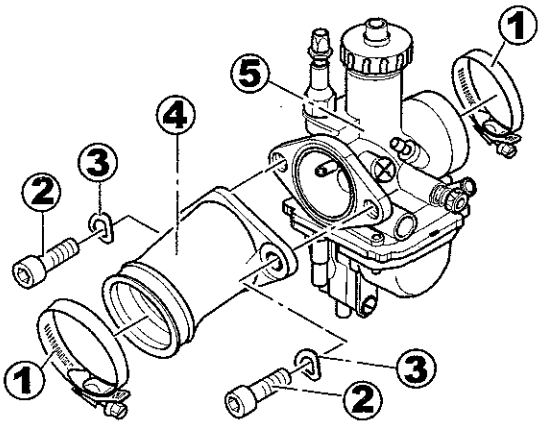

(1) Shell
(2) Cylinder screw
(3) Spring washer
(4) Carburettor connection piece
(5) Carburettor

The carburettor must be free of wear and contamination for the engine to function properly.
Contamination in the carburettor and the fuel system must be removed before adjustments are made to the carburettor.

6.12.1 Settings

Fuel level

Proper functioning of the carburettor is only guaranteed when the specified fuel level is maintained. The fuel level depends on how the float is set.

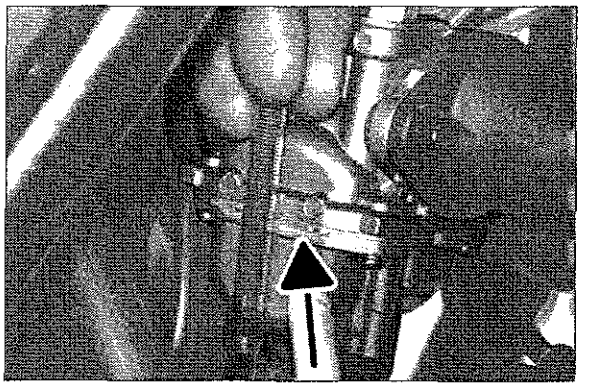

1. Position the vehicle upright on the installation stand. The carburettor must be positioned vertically.
2. Attach a fuel gauge to the drainage hose.
3. Open the filter valve, open the drainage plug and start the engine.
4. Hold the fuel gauge vertical next to the carburettor. Fill the carburettor and hose up to the same level. The fuel level must be at the level of the housing joint.
5. Read the fuel level, adjust by bending the bracket on the float support plate, if necessary (see 6.12.3 "Dismantling and Inspecting", float).

Fuel level: 6 mm under the housing joint.

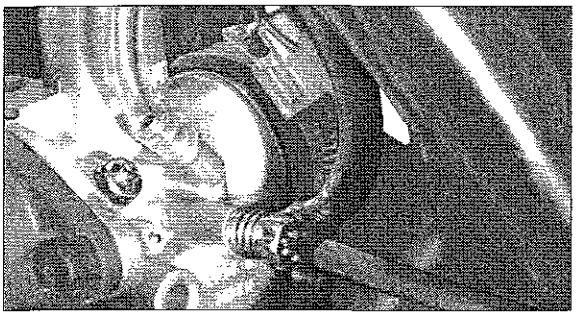

Idling speed

The nominal idling speed should be 1800^{+100} rpm.
The slide valve stop screw acts on the throttle slide valve to prevent it from closing completely.

1. Start the engine and bring it to operating temperature.
2. Screw the slider valve stop screw in or out until the nominal idling speed is reached.

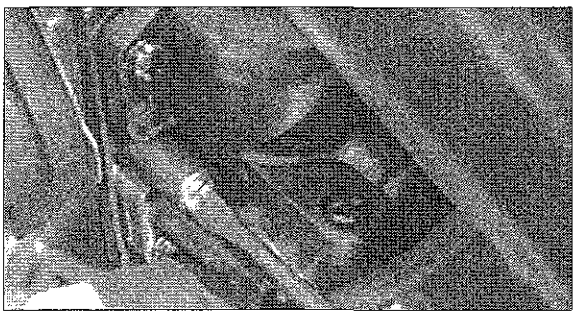

Idle

Without exhaust measurement:

1. Screw in the idling mixture screw up to the stop.
2. Then unscrew it 1.5 -2 turns.
3. Turn the slide valve stop screw until 1800^{+100} rpm is reached.
4. Repeat this alternating procedure until the engine runs properly.

With exhaust measurement:

1. Run the engine until it reaches operating temperature.
2. Connect the exhaust measurement device according to the manufacturer
   If the depth of the measurement probe is insufficient, connect an adapter to the exhaust silencer end which ensures the proper depth.
3. Turn the idling mixture screw until the engine runs properly, in compliance with a maximum CO emission of 4.5 %.
4. Set the idling speed to 1800^{+100} rpm.

6.12.2 Removal

Environment!

Leaking or drained fuel must be collected immediately and stored in a suitable location until final disposal.

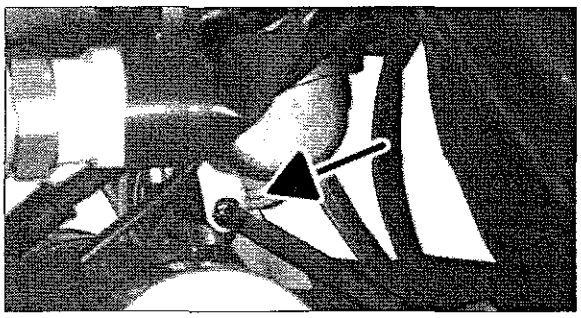

1. Let the engine cool, if necessary, close the filter valve.
2. Remove the fuel tank.
3. Place a suitable container under the vehicle, connect the drainage hose.
4. Open the screw, let the carburettor drain.
5. Remove the fuel hose from the carburettor.

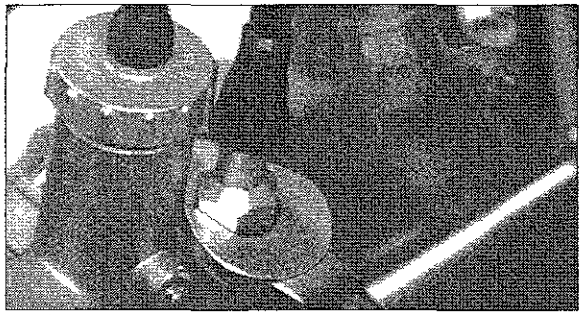

6. Unscrew the starting carburettor.

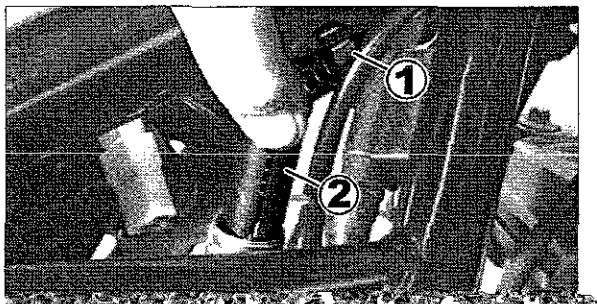

7. Unscrew seal cap (1).
8. Pull out the throttle slide valve (2).

6.12.3 Dismantling and Inspecting

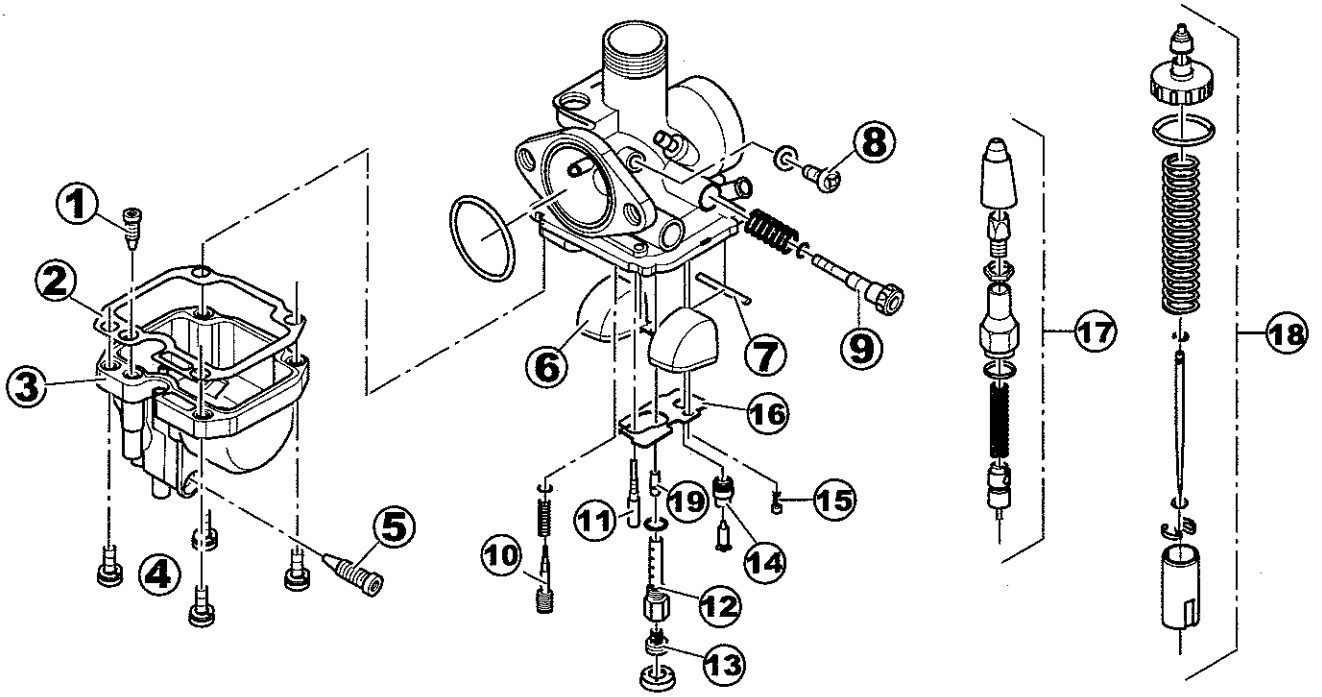

(1) Starting jet
(2) Seal, float chamber
(3) Float chamber
(4) Screws
(5) Screw
(6) Float
(7) Pin
(8) Screw with seal ring
(9) Slide valve stop screw
(10) Idling mixture screw
(11) Idling jet
(12) Main jet mount with needle jet
(13) Main jet
(14) Carburettor needle valve
(15) Screw with plate
(16) Plate
(17) Starting carburettor, complete
(18) Throttle slide valve, complete
(19) Needle jet

Removal

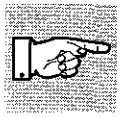

Note:
Never clean the jets with hard objects.
Changes to the jet cross-section increase fuel consumption.
Use a petroleum-based solvent for cleaning. Blow through all channels with compressed air.

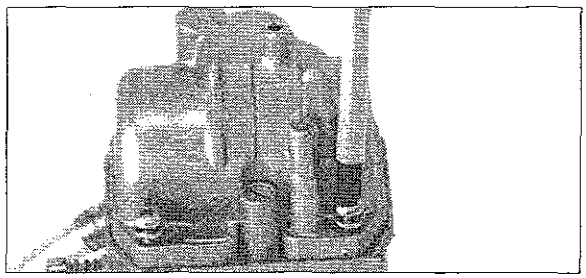

1. Thoroughly clean the carburettor.
2. Unscrew the four screws on the underside.
3. Remove the top part of the housing.
4. Remove all components, clean thoroughly and inspect.

Float

Note:
Never apply compressed air while the float is still in the float chamber.

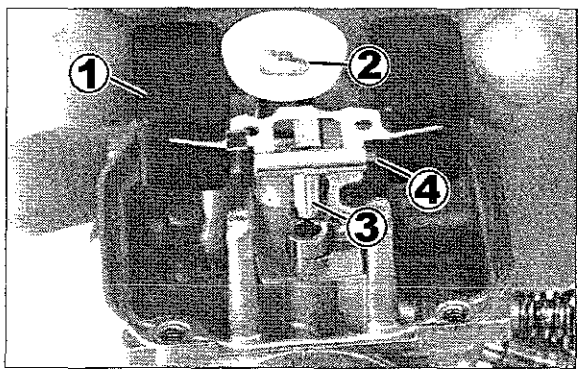

(1) Float
(2) Main jet with mount
(3) Carburettor needle valve
(4) Pin

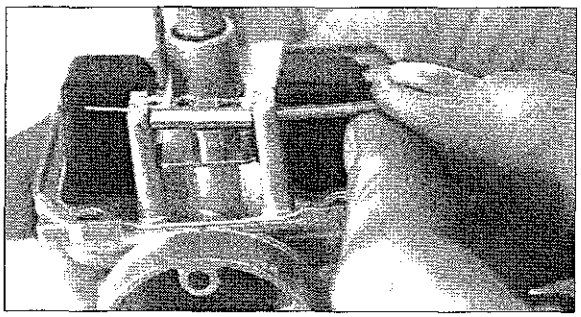

1. Pull out pin.
2. Remove the float and carburettor needle valve.
3. Inspect parts.

Always replace the carburettor needle valve and the valve seat as a set.

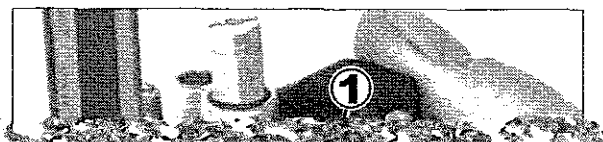

4. Attach the needle valve to the bracket on the float mounting plate (1).
5. Install the float, slide in the pin.
   The float mounting plate should touch the needle valve but

If the float height does not match the specified value, inspect the needle valve and valve seat, replacing if necessary.
If both parts are in good condition, bend the bracket of the float mounting plate until the value is set correctly.

Starting jet

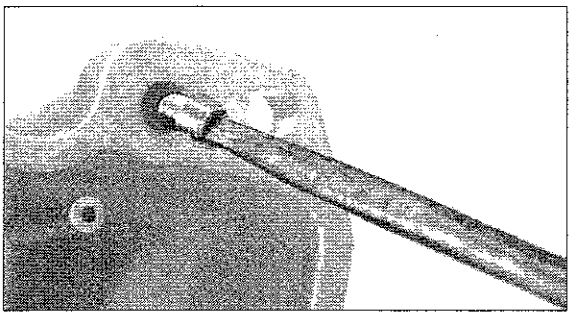

Inspect for wear and contamination.
Clean if necessary.

Carburettor needle valve

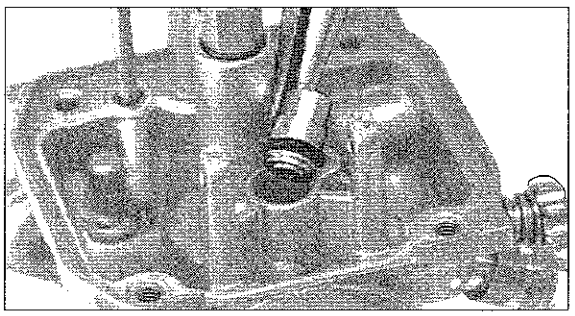

Inspect for wear and contamination.
Check the O-ring.

6.12.4 Installation

Always use new seals.

1. Insert the plate (7) and screw on with the screw (6).
2. Screw in all jets.

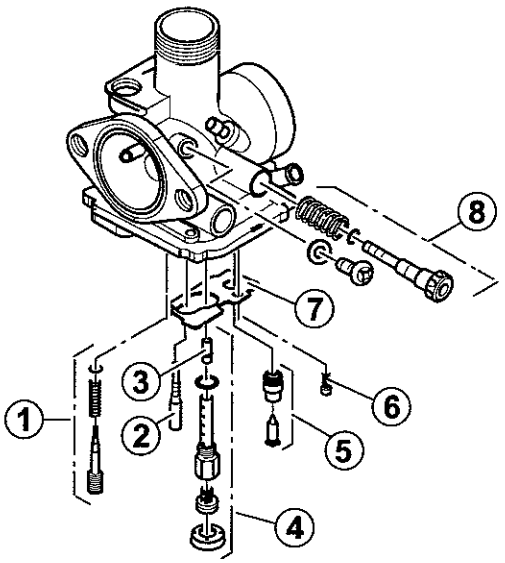

(1) Idling mixture screw
(2) Idling jet
(3) Needle jet
(4) Main jet with jet mount
(5) Carburettor needle valve
(6) Plate screw
(7) Plate
(8) Slide valve stop screw

3. Screw the starting jet into the float chamber.

4. Insert the float, slide the pin through the mount.
5. Measure the distance from the float to the edge of the

Ventilation hose

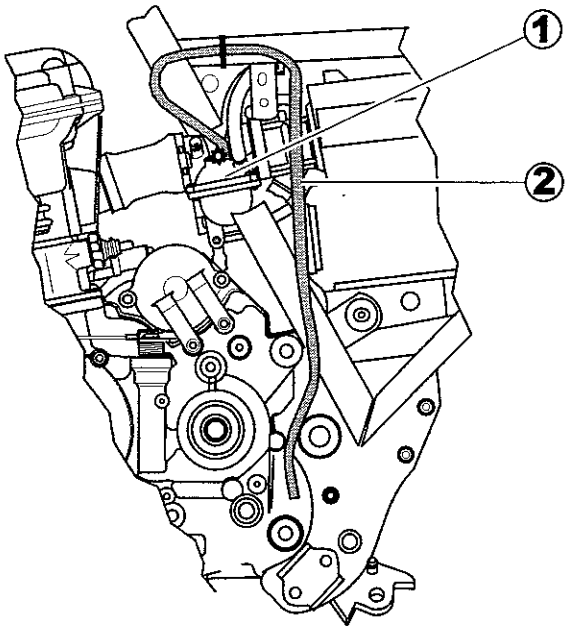

(1) Carburettor
(2) Ventilation hose

The ventilation hose must be run as shown in the sketch.
It may not be pinched. The end must not extend past the underside of the engine.

Overflow hose

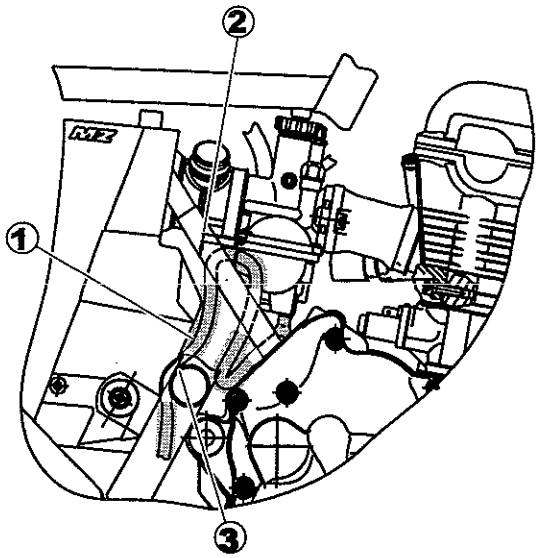

The overflow hose must be run as shown in the sketch.
It may not be pinched, the end must not extend past the underside of the engine.

(1) Carburettor overflow hose
(2) The top of the hose should not be above the lower edge of the carburettor parting joint near the hose clamp
(3) Overflow hose clamped between the frame pipe and intake muffler.

7 Index

1 - 10

A

B

C

D

E

F

G

H

I

L

M

O

P

R

S

U